Model Engineer

THE MAGAZINE FOR THE MECHANICALLY MINDED

READER'S MODEL

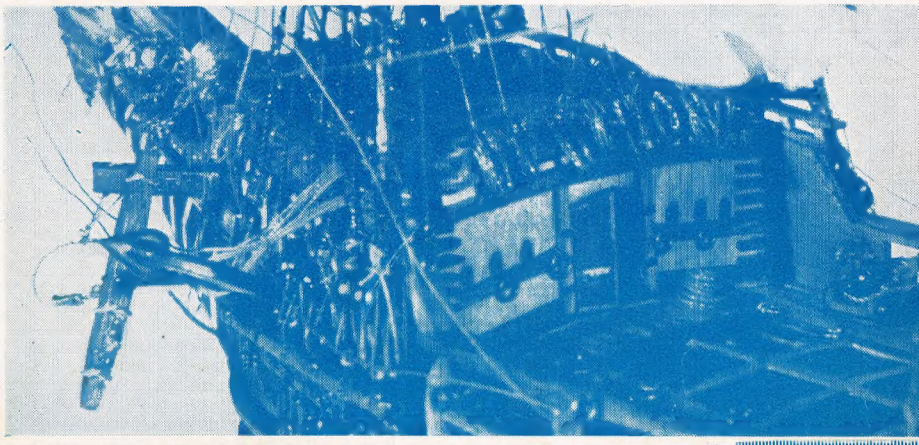

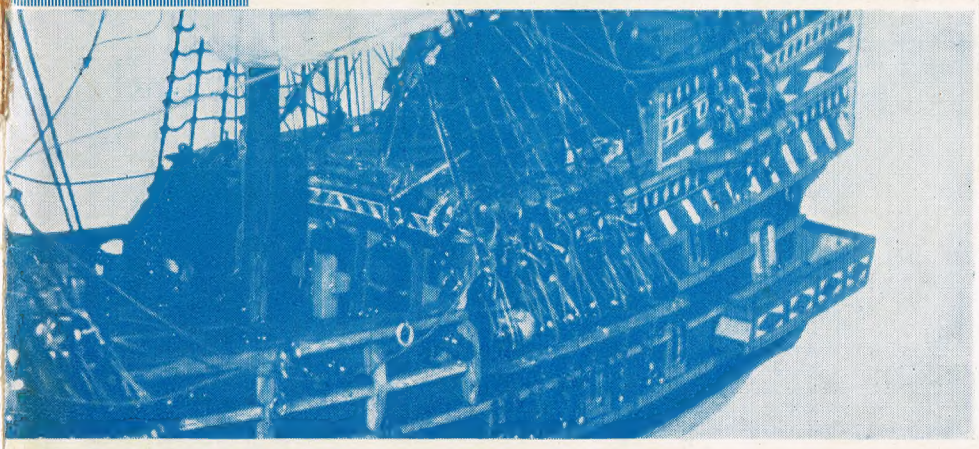

★

ELIZABETHAN GALLEON c 1595

ONE SHILLING 19 DECEMBER 1957 VOL 117 NO 2952

HANDYMAN AND HOBBY BOOKS

HOW TO MAKE MARQUETRY PICTURES *by J. C. Anderson.* Contains many instructive drawings, plus 12 art pages illustrating the importance of tone contrast, natural markings of veneers, grain direction, etc. Various methods are described and, for the benefit of beginners, the making of a picture is illustrated stage by stage. The creative side of the craft is also dealt with and there is much to interest experienced marquetry enthusiasts. This book shows how photographs can be used as a basis for attractive marquetry work; it also includes many useful hints on handling and cutting veneers. 82 pages. **4s. 6d.**, post 3d. (U.S.A. and Canada, $1.25, post paid.)

WATCH REPAIRING AND ADJUSTING *by W. L. Randell.* Enables everyone to experience the satisfaction felt when that delicate piece of mechanism, a modern watch, starts into action after patient overhauling. Explains simply but in detail the various parts and their functions and discusses the repair and adjustment side only after the method of working has been fully described. 72 pages, numerous illustrations. **3s. 6d.**, post 3d. (U.S.A. and Canada $1.00, post paid.)

HOW TO MAKE MODEL AIRCRAFT *by P. G. F. Chinn.* An attractive book in magazine format which incorporates articles by the author reprinted from *Model Aircraft.* It is packed with information and contains nearly 200 explanatory photographs. Covers everything of importance in the building of model aircraft, from the choice of essential tools, through basic construction problems to the thrill of the first successful flight. The book provides a short cut, under expert guidance, to the more advanced stages in model aircraft building and flying. Over 40,000 copies have been sold at the time of writing. **3s. 0d.**, post 6d. (U.S.A. and Canada $1.00, post paid.)

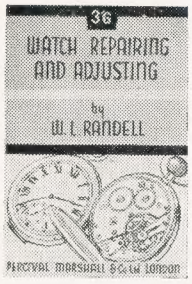

Just Published

MAKE YOURSELF A FAMILY CARAVAN *by I. W. Green.* Describes the construction of a 15 ft. caravan of simple design, which can be towed easily by the average family car and which has accommodation for four people. Complete step-by-step building instructions are given and there are numerous diagrams to explain the various stages of construction. The caravan is of simple but strong design, with vertical sides, square bottom corners and a simple roof. The interior layout chosen is one that has been tried and tested over a number of years. It consists of a combined double bed dinette with two additional single beds, a wardrobe, a sink and cooker unit and a storage cupboard. It divides into two separate rooms at night to enable two children to be put to bed in the aft half of the van, leaving the parents with the double bed, table, sink and wardrobe. Instructions are given for installing a lighting and cooking system. Most of the difficulties which the amateur is likely to encounter have been anticipated and there are numerous illustrations to help the text. Consideration is given to: The chassis and floor. Fittings and accessories. The body framework. The roof and interior panelling. The beds and dinette unit. The kitchen unit and wardrobe. Lighting, cooking facilities and exterior panelling. Windows, doors, ventilation and painting. **2s. 6d.** post 4d. (U.S.A. and Canada 80c. post paid.)

SIMPLIFIED STEREOSCOPIC PHOTOGRAPHY *by C. W. Wilman, B.Sc., A.R.P.S.* Any moderately competent photographer can produce stereograms showing depth and form after reading this book. It explains the basis of stereoscopy, taking stereoscopic photographs, viewing apparatus, materials, methods, trimming, masking and mounting, colour stereoscopy, etc. There are numerous illustrations. **5s.**, post 6d. (U.S.A. and Canada $1.25, post paid.)

HOW TO MAKE AN ELECTRIC CLOCK *by R. Barnard Way.* Explains in simple language with the aid of numerous illustrations how a simple mains or battery-driven clock can be constructed cheaply by the ingenious use of everyday materials. 58 pages. **3s. 6d.**, post 3d. (U.S.A. and Canada $1.00, post paid.)

CLOCK REPAIRING AND ADJUSTING *by W. L. Randell.* 2nd Edition. A well illustrated handbook intended for those without previous experience of clock repair work. It will enable the amateur to undertake simple repairs on most types of clock. The action of the various parts is fully explained and the reasons for stoppage commonly met with. Striking and alarm mechanisms are also dealt with in detail. 108 pages, numerous photos and diagrams. **3s. 6d.**, post 3d. (U.S.A. and Canada $1.00, post paid.)

PHOTO-ELECTRIC CELLS *by P. T. Smith.* Crown 8vo. Explains in simple terms how light can be utilised to serve a variety of purposes in the home, in commerce and industry, in advertising, sound reproduction and transmission of pictures, etc., etc. Illustrated with photographs, diagrams and circuits. 84 pages. **5s.**, post 3d. (U.S.A. and Canada $1.25, post paid.)

1,001 MECHANICAL FACTS *edited by Percival Marshall, C.I.Mech.E.* A handbook of simple mechanical knowledge for everyone interested in the work of the engineer. Matters dealt with include: technical terms and definitions; weights and measures; metals and alloys; fastening devices; screws and threads; gears and wheels; power transmission; air and water power; engines and boilers; engineering production; machine tools; facts about famous engineers and inventors; facts for the workshop. 107 pages, numerous illustrations. **3s. 6d.**, post 3d. (U.S.A. and Canada $1.00, post paid.)

From your bookseller, or by post by completing Order Form below

M.E. DETACH ALONG DOTTED LINE

ORDER FORM

To Percival Marshall & Co. Ltd., 19-20, Noel Street, London, W.1

Please supply by return of post

NAME (Mr., Mrs., Miss).....

BLOCK LETTERS PLEASE

.....

TITLE OF BOOK

ADDRESS.....

.....

TITLE OF BOOK

.....

I enclose remittance value £ : : d. to cover postage and packing.

(Overseas customers can use an International Money Order)

"ZYTO" $3\frac{3}{8}$" BACK GEARED, SCREWCUTTING, TURNING, SURFACING LATHE

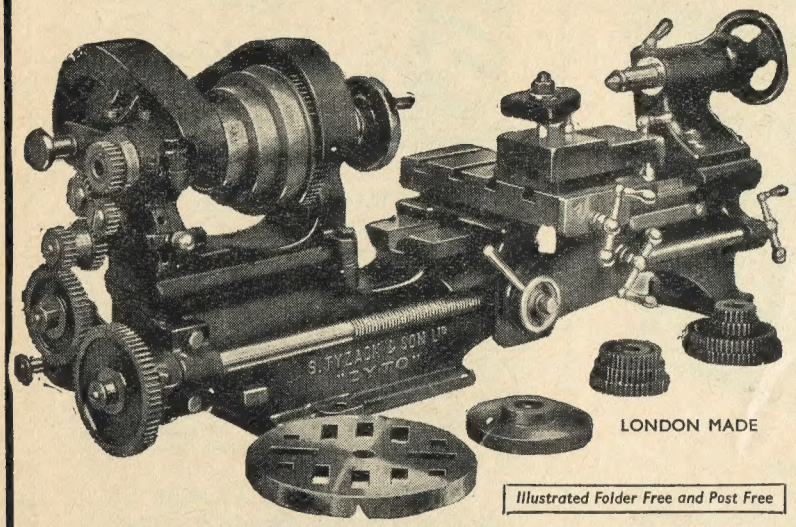

LONDON MADE

Illustrated Folder Free and Post Free

"THE FINEST LATHE VALUE"

- ★ $12\frac{1}{2}$" BETWEEN CENTRES
- ★ FULL COMPOUND SLIDE REST
- ★ HOLLOW & SET OVER TAILSTOCK
- ★ TUMBLER REVERSE
- ★ CALIBRATED SLIDES, ETC.

More unsolicited testimonials taken at random from hundreds received.

"I have used Lathes for many years now, and consider the Zyto Lathe is really a first-class job, and I am very pleased with it."
A.R., Hawkhurst, KENT.

"I must say, with great satisfaction, that the Zyto Lathe I had from you is ideal for model work and it performs well in every way. I am more than satisfied with the machine."
J.C., Axminster, DEVON.

"Delighted with the general excellence of the $3\frac{3}{8}$ in. Zyto Lathe. A very creditable product."
S.S., ISLE OF WIGHT.

"May I say how pleased and satisfied I am with my Zyto $3\frac{3}{8}$ in. Lathe. I am proud to have it in my workshop.
W.L., Diss, NORFOLK.

"I am very, very pleased with the Zyto Lathe. It is an excellent job and I shall certainly recommend it."
B.P., Wednesbury, STAFFS.

£6 12s. 0d. DEPOSIT
Balance 8 monthly payments of 74s. 4d.

Cash Price £33 0s. 0d.
* Includes Gear and Pulley Guards, full set change wheels and standard equipment *

S. TYZACK & SON LTD 341-345 OLD ST., LONDON, E.C.1 Tel.: SHOREDITCH 8301 (ten lines)

Model Engineer

CLASSIFIED ADVERTISEMENTS

- PRIVATE RATE 3d. A WORD
- TRADE RATE 6d. A WORD
- MINIMUM 12 WORDS
- BOX NUMBER 1/- EXTRA

To "MODEL ENGINEER" Classified Advertisement Dept., 19-20, Noel Street, London, W.1

Please insert the advertisement below under

heading.....for.....insertions

Name .....

Address .....

Name and address, if to appear, must be paid for.

.....	.....	.....	.....	.....	.....
.....	.....	.....	.....	.....	.....
.....	.....	.....	.....	.....	.....
.....	.....	.....	.....	.....	.....
.....	.....	.....	.....	.....	.....

Three insertions for the price of two. ★ Private advertisers only.

Please write in block letters. REMITTANCE VALUE ..... ENCLOSED

" *Undoubtedly it is one of the most comprehensive books on the model engineering lathe ever produced.*"
HOBBIES WEEKLY

The "ME" LATHE MANUAL

by

Edgar T. Westbury

12s. 6d.

Post 1s. (U.S.A. and Canada $3.00).

Other Press Notices

" *This volume deals exclusively with the specialised subject of the metal turning lathe as used in light engineering. Due emphasis is given to the essential features in lathe design, as distinct from non-essential refinements or luxuries. The difference between industrial production lathes and those intended for jobbing work is also stressed. Various forms of lathe tools are described, separate chapters dealing with all kinds of lathe operations, such as turning between centres, chuck and faceplate work, boring and internal turning and screw-cutting. The text is supplemented by a large number of simple line illustrations and photographs of lathes and attachments.*"
OVERSEAS ENGINEER.

" *The chapter on 'Miscellaneous Lathe Operations' describes many other jobs the lathe can do—aided in some cases by the use of a simple attachment or fixture—such as profile, eccentric and spherical turning, relieving, spinning, burnishing and lapping.*"
HOME MECHANICS.

" *Can be thoroughly recommended.*"
MACHINERY LLOYD.

" *Illustrations are many and are of high quality, and carry the reader through the problems of machining irregular shaped components such as are found on small engines and models as well as other machinery.*"
CANADIAN MACHINERY AND MANUFACTURING NEWS.

M.E.

ORDER NOW

To Percival Marshall & Co. Ltd.
19-20, Noel Street, London W.1

Please send by return a copy of " *The M.E. Lathe Manual.*" *I enclose remittance of* 13*s.* 6*d. to cover postage and packing.* (*U.S.A. and Canada* $3.00).

NAME (Mr., Mrs., Miss).....
(Block letters please)

ADDRESS.....

.....

(Overseas customers can use an International Postal Order.)

Sea Adventure Books

CRACKER HASH

By Cmdr. J. R. Stenhouse, D.S.O., O.B.E., D.S.C.

In this account of his early voyages in a " Cape Horner," Comdr. Stenhouse gives the reader a vivid picture of the hard discipline and tough conditions endured by the apprentices who went to sea on sailing ships at the turn of the century. However, notwithstanding the unpleasant jobs, bad food and often unjust treatment, Stenhouse contrived to enjoy himself and describes with a wealth of anecdote and humour his adventures afloat and at ports of call. Vice and violence abounded on the waterfront and the risk of being shanghaied was ever present. Needless to say, the young apprentice and his mates got into trouble: the outcome is described in the book. 240 pages. 16 photo plates. **15s.** postage 1s. (U.S.A. and Canada, $3.50, post paid).

UNDER FOUR FLAGS

By Captain Herbert Edwards, R.N. (Ret.)

The fascinating story of what is possibly a unique career during which the author served under the *Norwegian Ensign*, the *Red Ensign* of the Merchant Navy, the *Blue Ensign* of the R.N.R., and finally the *White Ensign*, at the turn of the century. Prevented by personal reasons from joining the Royal Navy, Capt. Edwards went to sea at 14, and did not achieve his ambition of becoming a Naval Officer until he was 31. In the intervening years he had sailed round *Cape Horn* in a Norwegian barque before his fifteenth birthday, served a four-year apprenticeship in sailing ships and risen to the rank of Second Officer in Royal Mail Ships. " *A fine story of the sea* "—Daily Mail. 223 pages and a number of photo plates. **10s. 6d.** postage 8d. (U.S.A. and Canada, $2.50, post paid).

THEIR LAWFUL OCCASIONS

By Captain Herbert Edwards, R.N.(Ret.)

This second book is the sequel to " Under Four Flags " and continues the story of a remarkable career. The author, while on an R.N.R. training course in 1913, was offered a commission in the Royal Navy and the new book takes up the story at this point. Herbert Edwards served both at sea and ashore as a gunnery officer during the Great War and had his full share of excitement. In 1939 he was recalled to active service and relinquished his post as Governor of the Royal Merchant Navy School to take command of a Shore Establishment in the Isle of Wight. Successive promotions followed and before he retired in 1946 he was twice Chief of Staff. 256 pages and a number of photo plates. **15s.**, postage 1s. (U.S.A. and Canada, $3.50, post paid).

THE WHEEL'S KICK AND THE WIND'S SONG

By Captain A. G. Course

A well-written story of the men, ships and fortunes of the well-known John Stewart Line, the last owners of foreign going, square rigged, cargo-carrying sailing ships registered in Great Britain. A piece of real sea history, written by one of the participants. Live with the author again through the hazards of days under sail when it required courage and the love of sail to go to sea. " *Made me feel much refreshed and the better for reading it.*"—Gilbert Harding in a B.B.C. broadcast. 278 pages and a number of photo plates. **18s.**, postage 1s. (U.S.A. and Canada, $4.00, post paid).

Percival Marshall & Co Ltd
19-20 Noel Street, W.1

Model Engineer

ONE SHILLING 19 DECEMBER 1957 VOL. 117 NO 2952

Published every Thursday Subscription 65s. (USA and Canada $9.25) post free

In this issue

819 Smoke Rings
821 ME gauge I steam locomotive
823 BTH main line diesel
824 Barograph—2
827 Beginner's workshop
828 Mixed bag
831 Independent feed for the saddle—I
834 Traction engine rallies
836 LBSC
839 Fixed steady
841 ME workshop
844 Postbag
848 Readers' queries
850 Club news

Next week

Allchin ME traction engine: In this concluding article W. J. Hughes will deal mostly with painting and lining the model

Around the exhibitions

Three-masted barque

Unusual locomotives

The Editor is pleased to consider contributions for publication in MODEL ENGINEER. Manuscripts should be accompanied by photographs and/or drawings and should have a stamped addressed envelope for their return if unsuitable. None of the contents of MODEL ENGINEER may be reproduced without written permission. All correspondence should be addressed to the Editor, Model Engineer, 19-20 Noel Street, London, W1.

Smoke Rings

A WEEKLY COMMENTARY BY VULCAN

A STEADY stream of letters from overseas readers continues to reach my desk—and very pleased I am to receive them. Cuttings from newspapers and magazines are usually enclosed; they make interesting reading and are passed round to all who are interested in the subject.

One of the latest to write is Mr H. W. Bull, of North Sacramento, California. He is good enough to refer to MODEL ENGINEER as "the wonderful weekly" and says it is "thoroughly enjoyed by me."

He sends a cutting from a 1929 issue of the *Santa Fe Magazine*, with comments, on European railways by a London correspondent. The article refers to the automatic colour signalling which was then in use on the Liverpool Overhead Railway and also includes an interesting picture of a passenger car of the Paris Metropolitan Railway.

It is not possible to acknowledge every cutting from readers in other countries but I can assure them that we are always pleased to hear from them.

Tough old bird

NEAR the mouth of the Medway one of the wooden walls of England is fighting her last battle. The *Cornwallis*, a 74-gun three-decker of 1,810 tons, was built at Bombay in 1813 and first commissioned in November 1814, the year before Waterloo, as flagship of the Commander-in-Chief, East Indies.

Dismasted, cleared down to her main deck, and gutted of her interior, she has served for many years as a landing jetty at Sheerness Dockyard; and now, alas, even in this humble capacity, she is to be replaced. The old ship that saw the end of sail in the Royal Navy has to give way to a concrete jetty.

She is not yielding easily. Captain R. Souter, from Johnshaven near Montrose, Master of the Royal Fleet Auxiliary salvage ship *Succour*, speaks of her as "a tough old bird." The *Succour* has ripped away the weather-deck planking, removed the fore-and-aft beams and exposed the cross beams which are nearly 2 ft square. Huge spikes, and bolts 3 ft long, are proving a problem to shift when work on the lower decks is possible only at half-tide and more than 1,000 tons of mud has silted into the hull.

Silver nail

The crew of the *Succour* have taken out from the main deck the original hooks from which the sailors swung their hammocks. These hooks were not quite 18 in. apart—a C. S. Forester touch which makes us see what the Navy was like back in the days of Horatio Nelson and Horatio Hornblower. The men, remember, served in the damp, hot tropics.

Another discovery in the *Cornwallis* is a tarnished Indian coin. The crew are now looking for a 6 in. silver nail known to have been driven into the hull during a Parsee religious ceremony.

Smoke Rings . . .

You never know what you may find when you are breaking up an old ship. It is, of course, a pity that such vessels should ever be broken up at all. Those old timbers at Sheerness are a bit of history. Those 3 ft bolts are the work of a forgotten craftsman 144 years ago. Even the name *Cornwallis* has familiar echoes—in India and, still more, in America where Charles Cornwallis, the first Marquess, surrendered at Yorktown in 1781.

I doubt if the most modern concrete jetty will mean as much to the sea-minded people of Sheerness as their old wooden wall. The ship has been there since 1865 when she left the Coast Guard after having the distinction of being the first warship commissioned for the Coast Guard Service when it was reorganised under the Admiralty.

During the first world war she was commissioned again as HMS *Wildfire*, and in the second war she saw many great ships sail away to battles in which she, the tough old bird, could not take part.

The ME tailstock turret

ALTHOUGH model engineers are not usually interested in quantity production, there are many occasions when the ability to carry out a sequence of lathe operations without the need for tedious changing and re-setting of tools is very useful. Many ideas for time-saving devices for this purpose have been described in the ME at various times, the most popular being multi-tool holders or turrets fitted to the slide rest or tailstock.

The latter type has declined in popularity in recent years, though it was once common both in amateur and professional workshops. It is, of course, best suited to tools for endwise traversing operations, and particularly drills, taps and reamers, but the conventional types hitherto employed have usually lacked the rigidity necessary for anything beyond light work.

Weakness eliminated

It occurred to Edgar T. Westbury, who designed the tailstock turret described in this issue, that the inherent weakness of the usual design is that all torque stress is taken on the keyway of the tailstock barrel, which is not designed for such heavy duty, and apart from actual strength, does not steady the tools adequately. By the addition of a robust torque arm, with a sliding member which fits between the shears of the lathe bed, this weakness is completely eliminated and it is found that quite heavy operations can be carried out without excessive strain on the tailstock. This improvement, believed to be entirely original, does not in any way impede the lathe movements or complicate either construction or fitting. It may not be adaptable to all types of lathes, but the principle is applicable to most lathes employed in amateur workshops.

Now for a carpet!

THE British Thomson-Houston D.8200 diesel-electric locomotive, which has been allocated to the Devons Road Motive Power Depot in London, is working freight trains between Poplar, Temple Mills, Acton and Willesden.

This is home ground to Leslie Elvin who drove the D.8200 at the handing-over ceremony. Mr Elvin began a career in live steam as far back as 1919 and is not at all unhappy with his new charge. You have only to meet him in his cab to realise that he takes just as much pride in the D.8200 (which has a maximum speed of 60 m.p.h.) as was ever shown by the steam locomotive drivers of the past.

Joseph Martin tells me a story which he thinks will amuse live-steamers. During the ceremony at Euston Mr Elvin noticed some cigarette ash on the cab floor. His second man, Frederick Cronk of Willesden, promptly pulled out a clean handkerchief, bent down, and flicked. . . .

Cover picture

Three angle shots of a model of an Elizabethan galleon of 1595 *built by Lusci Vincenzo, of Florence, Italy.*

Saving a line

NOW for a sad story, but one which may have a happy ending—if members of the Railway and Steam Locomotive Preservation Society get their way.

It concerns British Railways decision to close the Totnes to Ashburton branch line in South Devon. This line, which for the whole of its nine miles runs side by side with the lovely River Dart, is one of the most picturesque in the British Isles.

British Railways regard the line as economically unsound. The society, on the other hand, feels that the line *could* be made to pay if the running was reorganised and it was well advertised as a tourist attraction during the summer months. As a result it has decided to:

1 Produce an efficient passenger plan for presentation to BR.

2 Request that the society be allowed to take over and run the line if the plan is rejected.

This giant model of the ill-fated TITANIC *was built by a model making firm at Iver, Bucks. It is* 40 *ft long,* 4 *ft* 3 *in. wide and stands* 10 *ft* 3 *in. to the masthead. The model is to be used in the film " A Night to Remember "*

THE SMOKEBOX FOR NEWBURY

THE ME GAUGE 1 STEAM LOCOMOTIVE

By MARTIN EVANS

(Continued from 5 December 1957, pages 774 to 776)

COMING now to the smokebox, the main item is the squaring off to length at each end, and this can be tackled exactly as for the boiler barrel. The front edge should be bevelled off slightly (this can be done with a file while still in the lathe), then the inside of the tube cleaned out for a $\frac{1}{4}$ in. or so at each end with emerycloth.

The hole for the chimney liner is now drilled $\frac{7}{16}$ in. dia. and that for the steam and exhaust pipes should be made an oval shape, though this is best checked off from the job itself.

A short length of thick-walled brass or steel tube is ideal for the "joint-ring," but if nothing else is available, a piece of brass strip about $\frac{1}{4}$ in. × $\frac{1}{8}$ in. section could be bent around to form a circle and the joint silver soldered, finishing off by turning in the three-jaw in the usual way.

I used three 10 BA brass screws to hold the ring to the smokebox, filing off flush on the outside, the ring being made a nice push fit in the outer barrel.

The door ring could be made from a brass blank $2\frac{1}{4}$ in. o.d. × $\frac{1}{4}$ in. thick, a hole 1 17/32 in. dia. being cut by means of a parting tool set crosswise in the lathe toolholder.

Mild-steel strip $\frac{1}{4}$ in. × $\frac{1}{16}$ in. is used for the crossbar, a slot $\frac{7}{16}$ in. × $\frac{1}{8}$ in. being cut down the centre line to take the dart. This can then be fitted loosely by means of two short strips about $\frac{3}{16}$ in. × $\frac{1}{16}$ in. riveted to the inside of the door ring in the usual way. It should be possible to remove the crossbar through the smokebox door, and to re-assemble it when required in the same way.

The dart for the smokebox door is a straightforward turning job. A length of $\frac{1}{4}$ in. × $\frac{1}{8}$ in. mild steel is used and is set to run truly in the four-jaw; it is easier to file the "square" while still in the lathe, the short length of thread being put on with an 8 BA die.

Two door handles are required—one being drilled No 50 and tapped 8 BA the other having a square hole to suit the dart. My usual way to produce this square is to drill a hole a shade under the distance across the

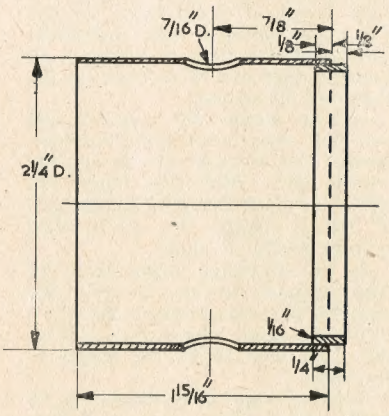

SMOKEBOX 20 G BRASS TUBE

The smokebox with, below, the crossbar and dart

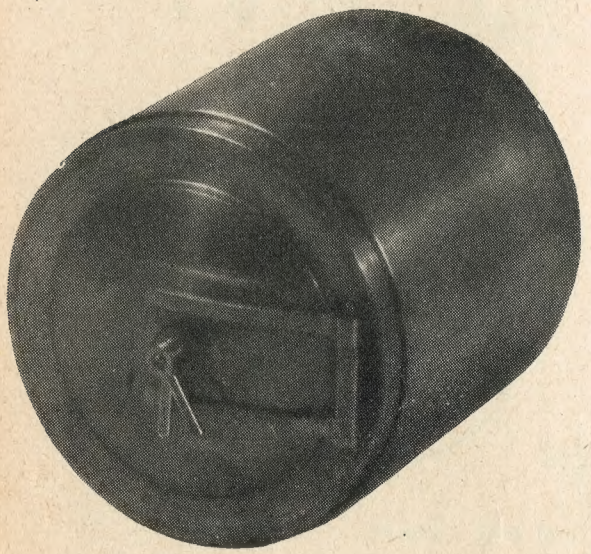

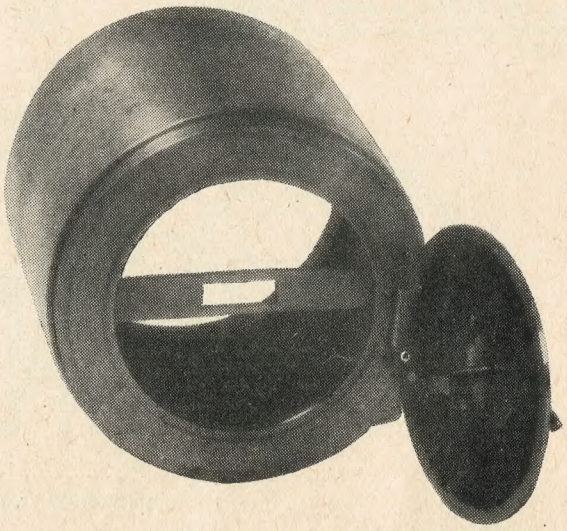

square (in this case about 0.080 in. dia.) and gradually open it out with a square needle file, checking against the dart every now and then to ensure a close fit.

The handle part is turned taper in the lathe. Any kind of steel will do or even German-silver. The boss should be drilled a size such that the handle can be pressed in, and it can then be silver soldered, cleaned up and polished. Run the tap or the square needle-file through again—as the case may be—as the handle will probably have run through into the bore.

A brass blank is again ideal for the door itself, one $\frac{1}{16}$ in. thick being chosen. This should be thoroughly annealed and then "dished" by hammering upon it with the ball end of a medium-size hammer. To finish turn it, drill it No 34 through the middle, and screw on to the end of a short length of round brass rod, say $\frac{1}{4}$ in. dia., concave side outwards; soft-solder the joint in addition, so that the door can be mounted in the three-jaw for turning.

Having turned the concave side (the edge *only* by the way), unsolder reverse and re-solder for turning the convex side. Strap-type hinges are shown—I much prefer the appearance of these !—though the short plate type is quicker to make.

As the strap-type hinges are a bit tricky to bend, to form an eye at the end, builders may prefer to file them out of the solid. Brass rivets 1/32 in. dia. were used to fix the hinges to the door.

The centre part of the hinge may be made with a short length of thread, say 8 BA, or, better still, 10 BA and lightly silver soldered for security.

The assembly of the boiler in the outer casing should be simple enough. A No 43 hole is drilled immediately above the regulator bush on the backhead.

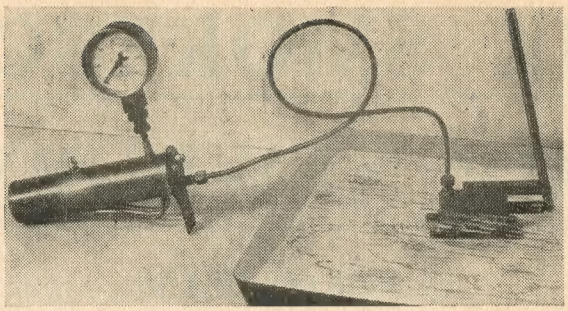

The set-up for the hydraulic test

The boiler is now inserted and lined up in the casing, and the No 43 drill put through this hole, making a centre on the small block fixed to the outer casing. This is then drilled No 49 and tapped 8 BA.

An 8 BA cheesehead screw can now be put in, which will hold everything together, while two further 8 BA screws, countersunk this time, are put through the lower part of the backhead and the back of the firebox and nutted inside.

In my next article I hope to deal with the boiler fittings and cylinder lubricator.

● *To be continued*

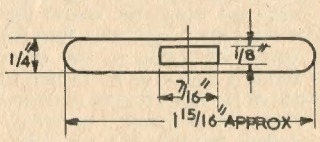

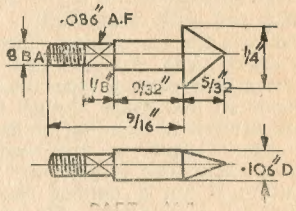

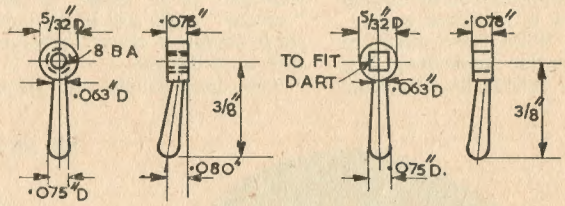

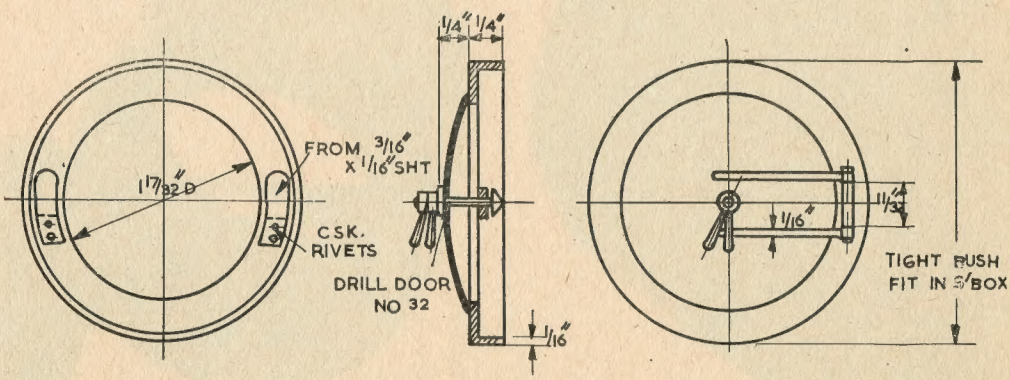

SMOKEBOX DOOR AND RING – BRASS

'. . . to replace the steam locomotive'

By Joseph Martin

BRITISH THOMSON-HOUSTON'S 800 h.p. mainline diesel-electric locomotive, the first of the BTH series for the British Railways modernisation plan, has a horn whose sound oddly recalls the old coaching days when the travellers passed in a rattle of wheels and a cloud of dust.

I heard it from a yard's distance on No 7 platform at Euston when D.8200, spotless and gleaming in a setting of flags and autumn flowers, was formally handed over to British Railways by Lord Chandos, the BTH chairman, and received by Lord Rusholme, chairman of the BTC's London Midland Area Board. "Quite French," said someone beside me; and the two notes sounded, indeed, so pleasantly rich that even a live-steam diehard would have softened for a moment.

Nor was the two-tone horn the only link which joined this scene to the past in the gracious continuity of history. No 7 platform at Euston is part of the original station built in 1837 and designed by no less a person than Robert Stephenson. As Lord Rusholme recalled in accepting the locomotive, trains were hauled out of Euston by endless cables operated by stationary winding engines at Camden. "Within a few years," said Lord Rusholme, "the wheel of history will have turned a full circle, and cables will again be installed at Euston; but they will be cables of a very different order, conducting high-voltage a.c. electricity from the national grid for the electrification of the main line from here to the North."

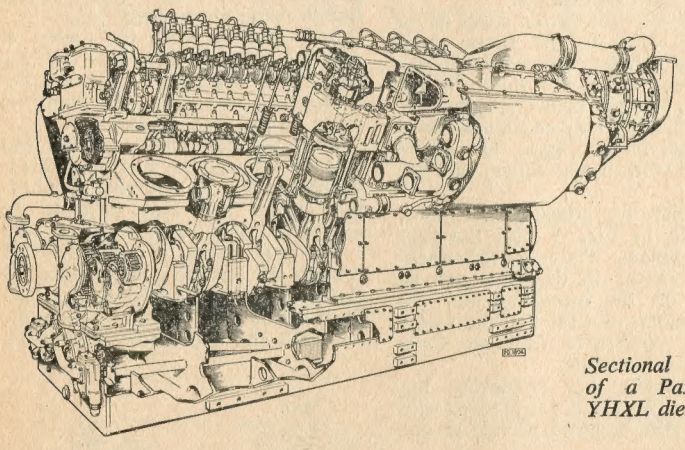

Sectional drawing of a Paxman 16 YHXL diesel engine

Until then diesel trains and locomotives would bring the immediate benefits of modern power to provide cleaner, quicker and more efficient and reliable services. British Railways now had well over a thousand diesel multiple-unit train vehicles in use throughout the country, and some 150 mainline diesel locomotives would be in service by the end of 1958. "We are looking to diesel and electric traction," Lord Rusholme added, "to provide the economic motive power which will eventually enable British Railways entirely to replace the steam locomotive."

Before another tear is shed, the diehard live-steamer may care to ask himself if he really has any objection to seeing Britain "with a railway system which is once more the world's best." For this, as Lord Rusholme pointed out, is the Commission's ultimate aim. The BTH locomotive, heading a class of ten which will be numbered D.8200-D.8209, is a step towards it.

Serving primarily on mainline freight duty, the D.8200 and her sisters are allocated to Devons Road Motive Power Depot in London, and will work freight trains between Poplar, Temple Mills, Acton and Willesden. With a maximum designed speed of 60 m.p.h., the engine has a maximum tractive effort of 37,500 lb. at starting and a continuous rating of 20,000 lb. at 10.5 m.p.h. The wheels, which are in Bo-Bo arrangement, are 39 in. dia.

In length, D.8200 measures 42 ft over the buffers and 38 ft 6 in. over the headstock. Bogie centres are 22 ft 6 in., the bogie wheelbase is 8 ft 6 in., and the weight of the whole in working order is 68 tons. A 400-gallon tank carries fuel for a Paxman 16-cylinder YHXL V-type diesel engine of 7 in. bore × 7.75 in. stroke, rated 800 b.h.p. at 1,250 r.p.m. Coupled to a BTH six-pole 500 kw. generator producing 690 to 337 v. at 720 to 1,320 amp., the engine supplies the driving power for four nose-suspended traction motors.

Whatever one thinks of the plain boxlike appearance which British Railways appear to favour in their diesels, the BTH Type 1 is undoubtedly a masterpiece of British craftsmanship. In work like this we see the Britain of the Stephensons, the Britain which built the comeliest steam locomotives ever to run, building again with superbly assured skill for the needs of another age. ▣

A RECORDING BAROGRAPH

The drum and its component parts are among the items which W. R. FIELD discusses in this concluding article

Continued from 12 December 1957, pages 789 to 791

I COME now to the race housings, and the first job is to turn them. Get a good push fit for the races and then drill the three 6 BA clearance holes in each (Fig. 2).

The drum spindle is turned from an odd piece of $1\frac{1}{4}$ in. dural rod. Drill and tap the $\frac{1}{4}$ in. × 26 t.p.i. hole for the bolt, reverse in the chuck and scribe a line across the face at the $1\frac{1}{8}$ in. end. With a sharp pointed tool, scribe a circle line $\frac{13}{16}$ in. dia. and where it intersects with the line across the face centre-dot and drill the two 7/64 in. holes $\frac{1}{4}$ in. deep.

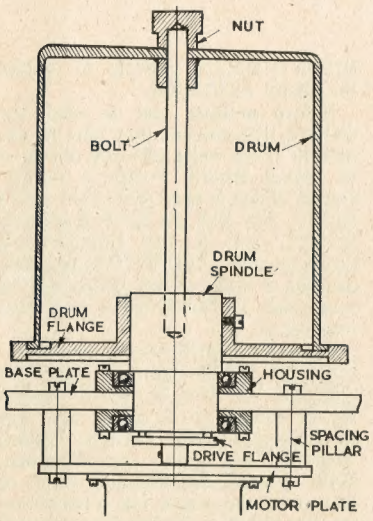

The drum mounting assembly

The drum (Fig. 3) may present a problem as to material. It might be possible to obtain a piece of tubing; the small flange at the bottom is not absolutely necessary so long as the recess in the flange is machined to suit.

The essential requirements are that it should be reasonably circular, the correct diameter, 93 mm. or 3.66 in., to suit the charts and as light as possible, as the little motor is not-over-powered. Fig 3 gives full dimensions and depicts the holding bolt and nut.

The drum flange (Fig. 4) is machined from an old casting I found in the scrapbox. It could be made from a piece of $\frac{1}{4}$ in. dural sheet. I recommend dural as this is light in weight.

Make the centre hole $1\frac{3}{16}$ in., a good fit on the spindle, and the $3\frac{7}{8}$ in. dia. on the boss side a running fit on the small flange on the drum. The inner diameter, $3\frac{1}{4}$ in., is not critical and could be machined right down to the boss to make it even still lighter. Note the three 4 BA holes for holding it to the spindle.

Fig. 4 also shows the small flange which is fixed to the motor shaft. The two driving pins should be the same centres as the holes in the bottom of the drum spindle, i.e. $\frac{13}{16}$ in. The pins may be either screwed or riveted in the flange, but ensure they are vertical and square with the flange.

The plate for attaching the motor is shown in Fig. 5 with the four spacing pillars. The holes for attaching the motor to the plate can be spotted off the motor as they are very irregular, but see that the motor shaft is concentric with the large hole in the baseplate.

Next make the pen-lifting bar (Fig. 6). The aneroid is received with a $\frac{5}{16}$ in. BSF screwed portion at one end which was used for attachment to the base. The other end has a small plain $\frac{5}{16}$ in. dia. boss.

As it is inadvisable to drill this plain boss for fear of letting in air a small cap with an extension rod is used to connect it to the first lever. This is shown in Fig. 7 attached with two 10 BA screws.

The $\frac{1}{8}$ in. dia. extension rod is slit down $\frac{1}{4}$ in. deep at the top end to take 0.010 in. shim steel forms the connecting links. It is also cross-drilled to take a 0.031 in. steel pin, which should be a tight fit in the rod but a running fit—without shake—in the shim-steel link. I found that the parallel portion of an ordinary sewing needle made an excellent pin.

It is easy to break the pieces off with two pairs of pliers and trim the ends up on the grinder. Leave the pins a little long, say $\frac{3}{16}$ in. and then it is easier to get them in and out.

Now for the pillar and fork-end which overhangs the aneroid. This is detailed in Fig. 8. The total height is not critical and may have to be altered to suit the aneroid being used.

The only points to watch are that it clears the aneroid and the links are shortened or lengthened as required. Turn it from $\frac{1}{2}$ in. square brass, screw the 2 BA end and before milling out

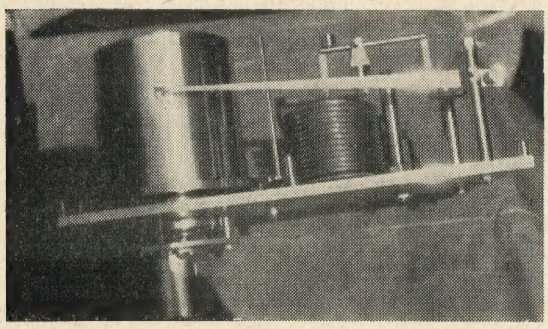

Left: General assembly showing the drum, motor, pen-lifting rod, aneroid, first lever, connecting links, rear pillars and pen arm

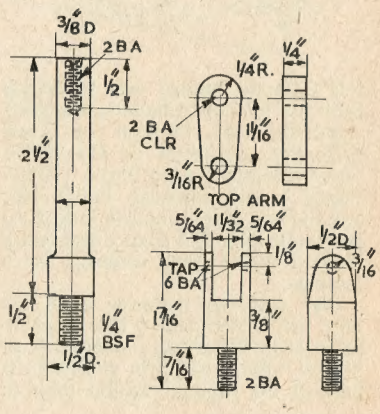

Right: Fig. 8

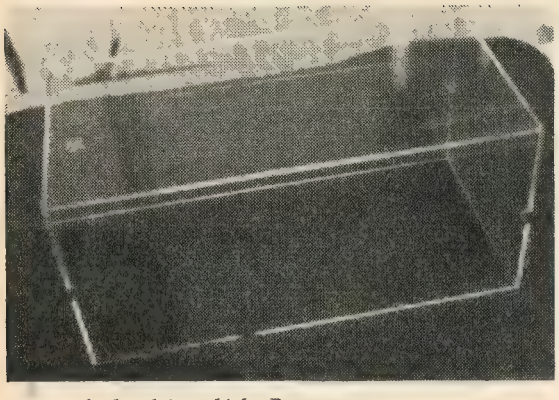

View of the $\frac{1}{8}$ in. thick Perspex cover (glass may be used if desired)

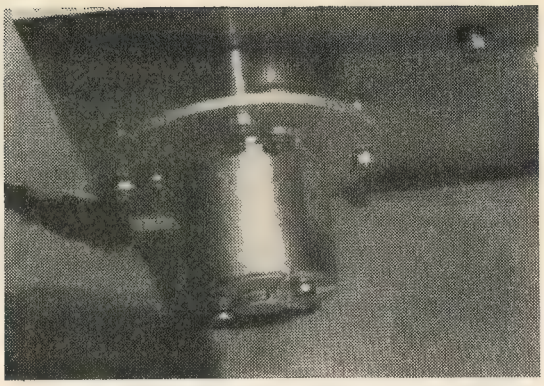

A view under the baseplate showing the motor attached with four bolts and turned distance collars

the fork drill and tap the 6 BA hole right through. This will ensure getting the two holes in line.

The first lever, which is pivoted in this fork, is shown in Fig. 9. It would be best not to put too high a finish on this part as the ratio (which, in my own case, is 2 : 1) may require slight alteration; it depends on the aneroid characteristics.

If the movement of the pen for a given distance (checked against an accurate barometer) is insufficient or too much, the ratio will require increasing or decreasing either on this lever or the one of the pen-arm spindle.

The lever is turned from $\frac{3}{16}$ in. round brass as shown as is the little counterbalance weight. The axle

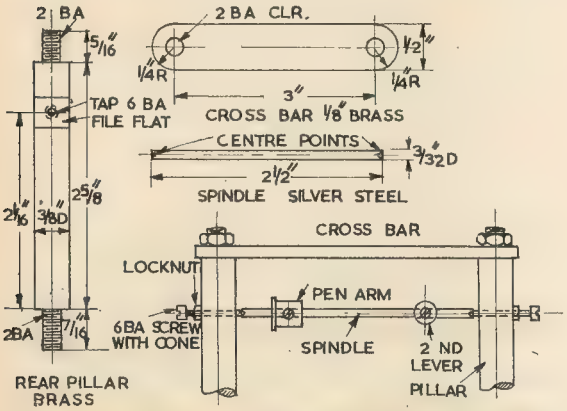

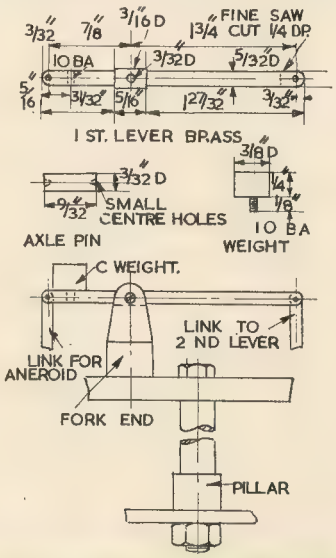

Left: *Fig.* 10

Right: *Fig.* 9

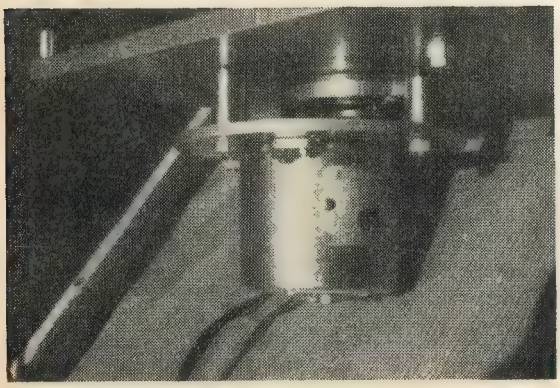

Another view of the motor showing the underneath ballrace housing, the 3½ in. plate to which the unit is attached and the collars spacing it from the baseplate

This illustrates the first lever, which is connected to the aneroid and the two connecting links of shim steel. The small boss attached to the short arm of the lever acts as a counterweight

pin is just a 9/32 in. length of 3/32 in. silver steel faced to length and provided with two centre holes—very small, no more than dots—with the smallest centre drill you can find.

The rear pillars and cross bar supporting the pen-arm and second lever are detailed in Fig. 10 with the method of assembly. When set up the spindle, also the axle-pin in the fork-end, should be adjusted so that it can move freely without any end-shake.

The pen arm is adjustable on the spindle and will require setting to the correct barometric pressure in your area when the instrument is finally set in motion. (Figs 11 and 13 give details of the pen arm and second lever and balanceweight.)

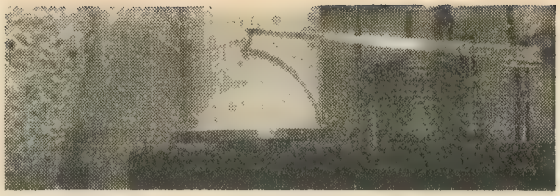

The drum with a chart attached. Charts are provided with ¼ in. overlap—one end is gummed

correct position relative to the spindle. Fig. 12 shows the ink-bottle receptacle which is attached to the base with a single 4 BA screw. The cover is located over the four pins at each corner of the baseplate.

The motor cabinet is glued together,

Do not over-fill the pen nib or the line will be very thick and take a long time to dry.

The bolt holding down the drum should not be tightened up hard. Just a slight pinch with the fingers is sufficient. Likewise when the pen-

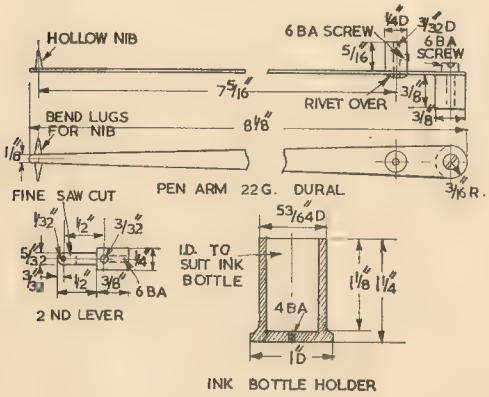

Figs. 11, 12 *and* 13

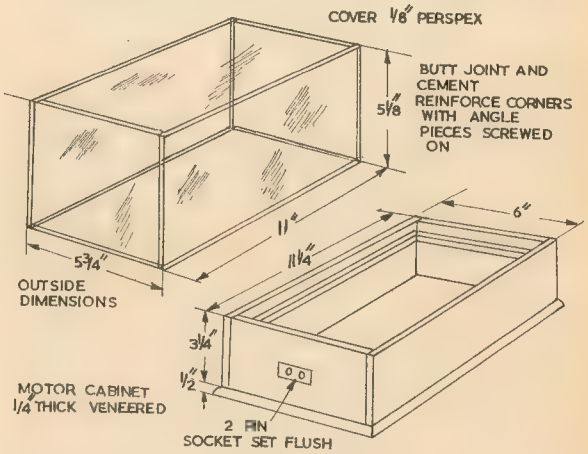

Fig. 12 (*remainder*)

The arm should be drilled 3/16 in. at the pivot-boss point, the spigot on the boss inserted and lightly burred over. Note that the boss and weight are on opposite sides otherwise it will be difficult to get at the adjusting screw.

At the end a 6 BA clear hole is drilled and the weight attached with a short 6 BA screw. The pen nib is secured with the bending strips in the

the inside opening to take the base-plate. The flush mains socket—miniature—can be obtained from any radio spares shop.

To prevent tarnishing, all the parts except the aneroid should be well polished and given a protective coat of clear lacquer.

The pen nib should be adjusted so that it touches the chart very lightly.

lift bar is operated it should only lift the nib about 1/16 in. away from the chart so as not to bend the arm. It might be as well to put a stop pin on the base so that it cannot be moved any further away.

Finally, in case of difficulty I shall be very pleased to help constructors. They should write to me care of the Editor. ▣

General view showing a sample chart with the recorded variations of pressure. The aneroid capsule can also be seen

Another view of the barograph. The pin on the corner is one of four short round pins for centralising the Perspex cover

Beginner's Workshop

FEATURES of PATTERNS

By GEOMETER

ACCURACY in details, alignment of chucking pieces, production and application of simple lettering are among the features of patternmaking particularly likely to occur in model construction. And, fortunately, the problems involved are for the most part easy to solve.

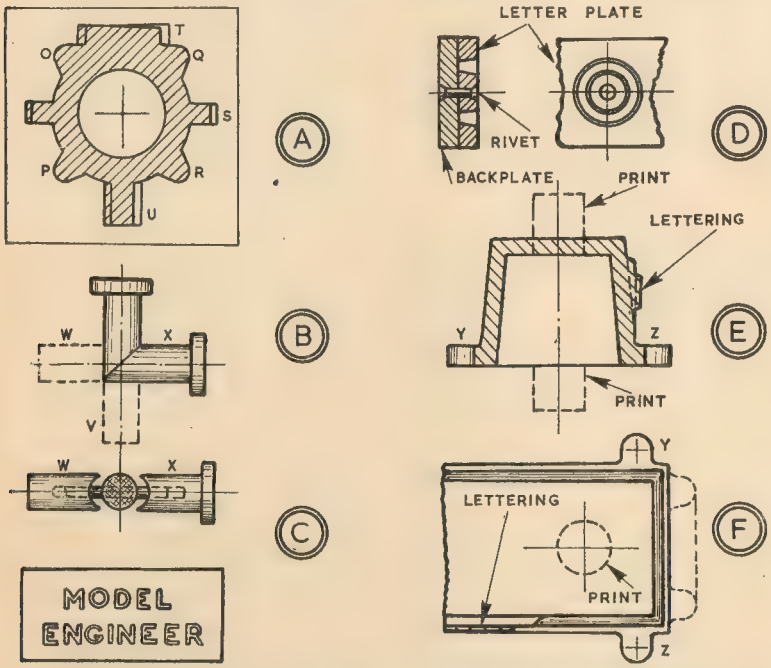

If a certain measure of crudity can be tolerated in a component finished from a casting, or if all-over machining is contemplated, then a lesser degree of accuracy can be accepted in the pattern than would otherwise be essential. But where accuracy in the as-cast condition is required reasonable care is necessary.

The most revealing case is where a single simple pattern is to be employed for the matching halves of a component—such as a single pattern for producing the two halves of a two-stroke crankcase. When the two similar castings are machined and placed face-to-face, the bosses, lugs, etc., on the right of one casting are on the left of the other, and malalignment in the pattern is obvious. However, a check on this can be made in production.

The face of the pattern which is to be the machined face of the casting should be placed down on a piece of tracing paper; if there is an obstructing core print, a hole should be made in the paper and a similar one in a piece of cardboard to use as a backing.

With a sharp HB pencil the outside shape of the pattern is marked, then the paper is removed, turned over, and applied to the pattern in a strong light. Errors can be seen—and suitably corrected by re-aligning or filing the features. Thus, at *A*, the small lugs *O,P,Q,R*, are in alignment on paper and pattern; but there are errors at the supporting lugs *S*, the cylinder platform *T*, and the chucking piece *U*.

Given a little care, this is an extremely accurate principle for symmetrical objects. In gauge-making, for example, the tool or part can be laid on transparent plastic, and a sharp-pointed scriber run round, when errors of no more than about 0.003 in. can be seen.

To ensure accuracy on chucking pieces several methods are possible. Often the piece can be turned integral with the pattern or the pattern can be marked with opposing centres. These are lightly drilled, then the drilling for the spigot hole is done with a drill running the chuck, supporting and feeding the pattern from the tailstock centre. Again, pins or dowels can be used to locate chucking pieces or parts of patterns.

An example of a pattern combining two methods is that for a flanged elbow, as at *B*. One part, its flange, and the chucking piece *V* are machined together, then drilled crosswise for a pin to locate the other part *X* and its chucking piece *W*. Chucking pieces are, of course, cut off after use.

Raised lettering, as at *C*, can be produced by cutting and filing the letters from brass sheet $\frac{1}{16}$ in. or so thick, then sweating to a brass backing plate and attaching to the pattern. The backs of the letters and the front of the plate should be tinned, the letters placed on, aligned and weighted, and the plate heated from below to fix them. Hollow lettering can be cut in one plate and this sweated to a backing plate, small portions of letters, such as the centre of the *O* at *D*, being attached with a tiny rivet.

Lettering must push straight into the mould—a requirement influencing construction of the pattern. When it is on a vertical face on the side of a bed of a model horizontal engine, as at *E* and *F*, section and part plan, moulding must be on the vertical centre line, using a halved pattern when there is lettering both sides. Lugs, *Y*, *Z*, must be on the side, or an end lug must be solid, and cut away on the casting.

For a hollow bed, as shown, a core box is required, and the pattern may have about four circular core prints. ▣

A mixed bag

Read on! The answer to your problem may be here

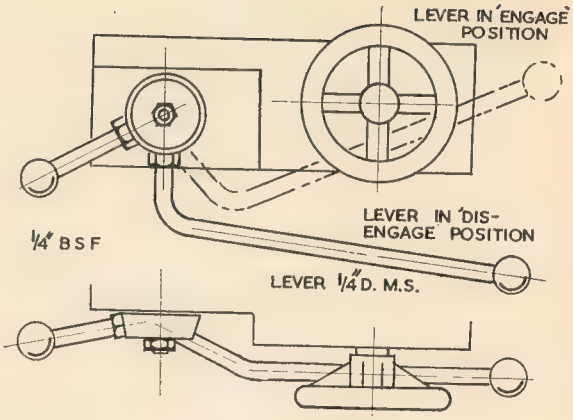

HYPERSTEREOSCOPY

By H. A. Robinson

FURTHER to the interesting article on stereoscopy by Geoffrey I. Lilley, here is an example of what can be done by hyperstereoscopy—i.e. wide base taking.

The vessel on the stocks was three-quarters of a mile away and pictures at eye separation—or even with the sliding apparatus described—would have given no sense of relief whatever. The two exposures were, therefore, made at 26 yards apart, the distance being founded on the recognised law that for good relief the taking base for any stereogram over or under natural separation should be 1/50 the range, when there are no mid-distance items.

If there are such then the permissible base is given by:

$$\frac{A \times B}{B - A} \times \frac{1}{50}$$

where A is the range of the mid-distance item and B that of the distant subject.

In practice, however, to use long distance hyperstereoscopy successfully there should be no mid-distance items at all. This is quite possible when taking over still water, looking down from a rise, or, again, when it is possible to trim away the foreground entirely.

The law of 1/50 range applies also to close in items, below natural separation, and does away with the need to turn the camera in at an angle, which is not very good practice.

In another experiment a stereogram of an oil refinery was taken at an extended base of about 8 ft, which again suited the range. By making the pairs merge by the naked eye or with a viewer excellent degrees of depth were obtained.

There is little doubt that stereoscopy is the ideal photography for the student of mechanics in any form.

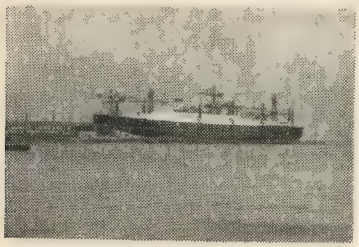

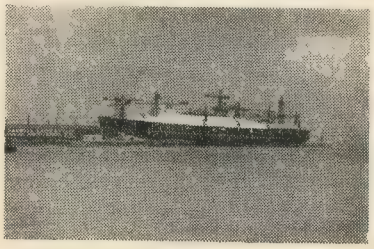

ALTERATIONS TO A LATHE

By F. R. Hall

THE following alterations I have made to my Myford ML7 lathe may be of interest to your readers.

The lever provided for the clasp nuts was found to be so situated that the swarf falling from the tool dropped on one's hands, which, when the swarf is hot—and one is watching the last of the cut ready to disengage—is decidedly uncomfortable. The remedy was to drill the lever cam at the bottom centre $\frac{3}{8}$ in. deep and tap $\frac{1}{4}$ BSF.

A 10 in. length of $\frac{1}{4}$ in. dia. of steel was threaded $\frac{1}{4}$ in. BSF for $\frac{1}{2}$ in. and a thin nut run on; it was then at 1 in. from the nut bent at right angles on about 1 in. radius. This was then screwed into the cam and adjusted until it pointed along the apron and it was then cranked until it lay between the apron and the hand wheel and the locknut tightened. The end was then provided with a knob.

The traverse can now be engaged and disengaged from the rear of the saddle—pull-up engages, push-down disengages. The original lever was left and is still sometimes used.

This modification has been in use over 12 months, gives no trouble and, in fact, improves the handling a lot.

The topslide was found to be very awkward for taper turning, especially if a shaft and flywheel were required with a 10 deg. taper fit.

To change the slide from 10 deg. inward to 10 deg. outward taper the

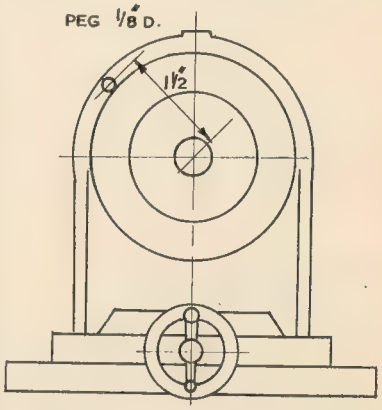

topslide has to be dismounted, the nuts moved and the slide re-assembled again as the slots fill with swarf. As the nuts will not slide across this was overcome by turning a new bung or spigot with the $\frac{1}{2}$ in. dia. $\frac{1}{4}$ in. eccentric to the $\frac{3}{4}$ in. dia.

This was assembled with the offset toward the centre of the lathe, allowing the radial cut-out of the topslide to coincide with the first slot of the cross slide on the centre line. The

original bolt and T-nut is used here, a ¼ in. BSF hole is drilled and tapped into the cross slide on the centre line and drilled through the radial cut-out, with the original bolt used in this hole.

The slide swivels either way by just slackening the two bolts.

To prevent the spigot turning and to keep the angles reading correctly, a ¾ in. dia. bung was made with a ⅛ in. dia. hole ¼ in. offset. This was positioned with ⅛ in. hole on the centre line and used with a ½ in. dia. spot face to make a 1/32 in. deep

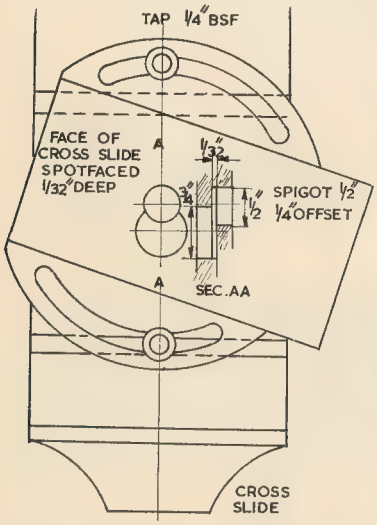

recess into which the offset spigot seats.

The old spigot can be employed for this but I preferred to keep this for use with large angles.

On using the vertical slide, I found that this tended to pull round on the bracket bolt to the main base, bolted to the cross slide, and one or two nasty crack-ups resulted. Even tightening-up drastically failed to stop this, so the bracket was drilled, the slide set square with the clock, and then drilled through into the base.

By drilling a few thou under and then finishing with the correct size a good hole was produced for a silver-steel pin; this will later be made a taper pin when a taper reamer is to hand.

This provides a positive setting each time the slide is mounted—and it has not moved yet. The pin hole is on as big a diameter from the centre bolt as practicable and approximately at 45 deg. to the slide.

I felt the saddle lock should have a lever fitted, but I found a cheap pressed-steel cycle ring spanner; this fits the hexagonal bolt—stays on all the time without being in the way, and is ready to lock the saddle.

A SOLUTION TO MARKING OFF

By J. Hart

As is well known a solution of copper sulphate when applied to a clean iron or steel surface instantly deposits a thin layer of copper. This will show the line of a scriber or pencil perfectly for marking-off purposes.

I keep some solution in one of those gum bottles that have a slitted rubber cap. In this it is ready for instant use; it keeps well and the rubber applies it nicely to the work.

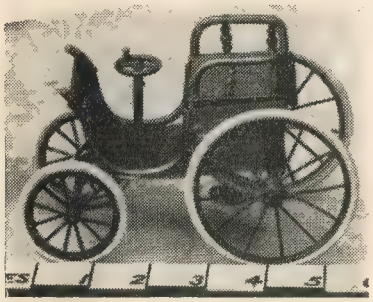

A BABY BENZ

By H. H. Nicholls

I was interested to read LBSC's notes on the peculiar, out-of-scale and generally unsatisfactory model locomotives of his boyhood. Here is an example of a contemporary scale motor-car model—an early Benz of about 1890-95.

It is nickel plated, has rubber tyres and a box at the back, apparently to contain cigarettes, and the wheels have flat spokes.

Its general appearance seems to indicate that it was distributed by agents or importers, to be exhibited in club lounges, etc.

I renewed the tyres and two or three spokes in the wheels.

SQUARE HOLES

By R. V. Hutchinson

Mr McKenna's emphasis on flatness of internal surfaces [ME, 25 July 1957] recognises the basic requirement for satisfactory seating of tool bits to be the avoidance of rocking on thin seats.

Any filing of internal surfaces, unless skilfully done, encourages this undesirable condition—so why file at all?

Just how essential is a square hole to proper support of a square tool bit? For light work on lathes up to at least 12 in. swing, a square hole seems rarely needed.

A drilled hole will take a straight round tool bit, and the lower corners of a smaller square tool bit can

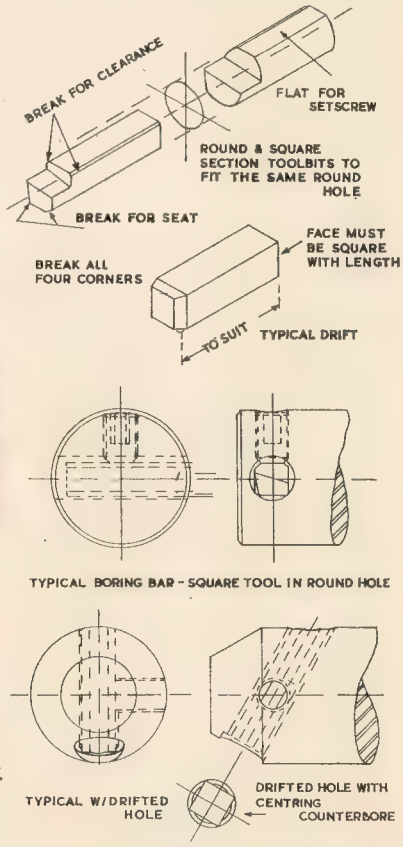

readily be trimmed to seat in the same hole—neither will rock. Flat-point set screws will handle any tendency the bits may have to twist in their seats.

However, if the user be convinced he *must* have square holes they may, in most instances, be drifted to size without filing. The drift is merely a selected tool bit blank, with the cutting end ground square off at the cutting end, and edges broken at the other. Drill the lead hole through 20 per cent. larger than the nominal square size of the drift, and counter drill the starting end to any reasonable depth—depending upon the general situation—to its diagonal dimension.

This oversize lead drill leaves only about 4/7 as much metal to be removed as would be if drilled the same diameter as the square-side

dimension. The centre drill centres the drift.

When back-up or adjusting screws are fitted behind the tool bit, the counter drilling may extend to the depth of the tapping for them, in which case it can do a good job of directional guidance. After drifting, the counter drill may, as necessary, be opened up to tapping size.

For successful drifting, cutting conditions must be uniform all round the perimeter of the drift, which must be symmetrical and centred on the work —which, in turn, must be uniform. Hence, drill setscrews holes after drifting, and for safety use a soft hammer when driving the drift.

My drawings show the relative shapes of bits fitting a given size hole, a typical square bit in a round hole, and an equally typical drifted hole (60 deg. off axis) in a boring bar.

Incidentally, steel mill practice in the United States on hot finished tool steels, up to and including $\frac{1}{2}$ in. nominal diameter, allows dimensional variations of nominal + 0.012 in. and − 0.005 in., and "out of section" 0.010 in. The latter takes in ovality in rounds, "lozenging" and crowning of sides in squares. So "rounds" are not necessarily circular nor "squares" square, and this explains why the drift should be a "selected" tool-bit.

However, drill rod between 0.125 in. and 0.499 in. nominal size comes to dimension ± 0.0005 in. for standard rounds and dimension ± 0.002 in. in "lime drawn" squares.

British practices may be expected to be dimensionally similar.

MODIFICATIONS TO A LATHE

By Martin McDonald

There must be many readers who for lack of financial backing, have to do all their machining on a small, plain lathe. There must be many more who find such a lathe a useful adjunct to a larger and more elaborate machine.

Being of the former class, I bought a small Lane $1\frac{3}{4}$ in. × 6 in. lathe—together with the usual accessories, such as a four-jaw chuck, precision drill chuck and faceplate—and although an excellent machine, I found one or two shortcomings.

The toolpost was of the plate-clamp type, and was found to be very awkward, especially on jobs which necessitated frequent tool change. Therefore, a new block-type toolpost was made from a piece of scrap in the form of a rectangular block of mild steel measuring 1 in. × $1\frac{1}{4}$ in. × $\frac{7}{8}$ in.

It was set up on the cross-slide table on a packing piece $\frac{1}{16}$ in. lower than the top surface of the topslide, for milling the slot. (By using this packing, tool bits which have been excessivly ground on the top of the cutting edge can easily be brought up to centre height.)

As to the actual milling of the slot, a 9/32 in. end mill was used, set as far back in the four-jaw chuck as possible to reduce overhang and consequent chatter. I found it best to take a deep cut with a very fine feed to the cross slide.

The 4 BA holes were then marked out, drilled and tapped, the $\frac{1}{4}$ in. dia. hole for the topslide stud drilled and

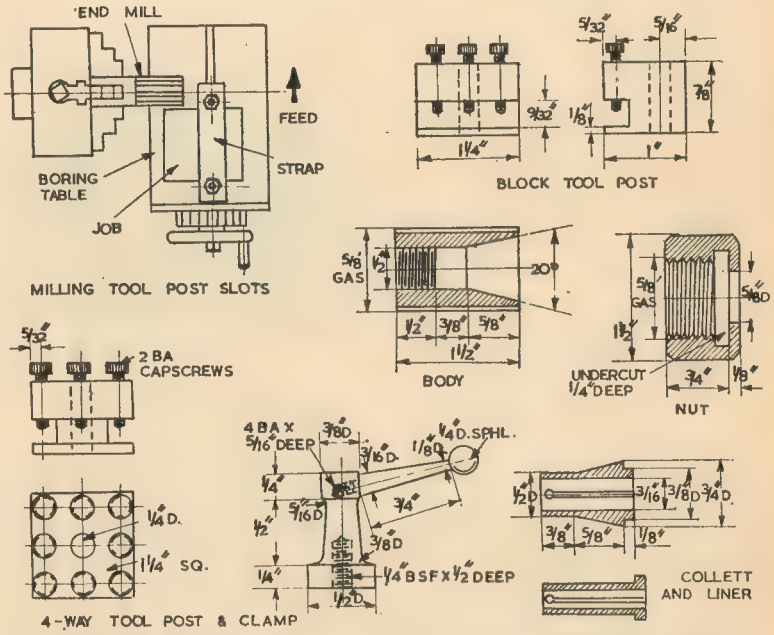

all sharp edges rounded off. Allen capscrews were used to clamp tools, and the overall result was so pleasing that I decided to have a go at a four-way toolpost.

This was made from a piece of mild steel $1\frac{1}{4}$ in. square, $\frac{7}{8}$ in. long. The slot milling was done in the same way as before using the same packing.

The clamp screw holes were drilled and tapped (see drawing) and the central hole drilled. Scrap bar ends formed material for the clamp lever, and when turned the pillar was held on its side at the required angle on the top slide, using the plate clamp and plenty of packing. The seating for the lever was then milled and the 4 BA hole drilled and tapped.

When all was finished it enhanced the appearance of the lathe considerably, besides being very solid and strong.

I felt a growing need for a self-centring bar holding device and, as a three-jaw chuck was too expensive, I decided on a collet. The design was by no means original, and though fairly simple (it had only three parts) several problems arose owing to the absence of a screwcutting lathe. However, all the threads were cut at my place of employment, the rest of the turning and boring being done on the lathe itself.

The body screws directly on to the mandrel nose and, like the closing nut, has holes for a tommy-bar.

Only one collet has been made (being of the maximum capacity—$\frac{3}{8}$ in.) in mild steel. For other smaller sizes brass liners are used split down the middle, and having a collar to prevent them from being pushed in too far.

In practice the collet is quite accurate (to one or two thou) for general work. Of course, all parts should be thoroughly cleaned before use.

While no claim for originality is made, the results nevertheless were gratifying.

All the attachments were made without castings—and, with the exception of the collet body and nut, using only the small lathe mentioned, a hand-bench driller and a few hand tools. In addition, all these attachments can readily be adapted to suit other makes of similar lathes.

An independent feed for the saddle

Which MARTIN CLEEVE regards as one of the most important additions to any lathe

THE addition of some kind of independent reduction gearing for self-act or slow saddle traverse to a small lathe adds enormously to the pleasures of the hobby.

To be fully effective, however, the independent gearing should allow of instant change to or from screwcutting speeds, offer a minimum interference to the change gear arm or quadrant and follow changes in lathe spindle speeds. When the lathe, for instance, is in back gear, the self-act feed ranges must slow down to suit.

Many are quite content with a worm meshing with the leadscrew gear, the worm being driven from a pulley on the lathe spindle; others, if they do anything about the matter at all, prefer to go the whole way and make (or buy) a selective gearbox which gives a full range of threads and feeds.

The worm reduction method certainly satisfies a craze for ultra-slow feeding, but introduces some delay both in setting for screwcutting and in changing back again. On the other hand the construction of a selective gearbox could well become a kind of separate hobby in itself. I do not think one is commercially available for the EW.

Compared with these extremes, the arrangement here described should be regarded as a convenient and economic middle course.

The EW screwcutting arrangements differ slightly from what might be considered as standard practice for

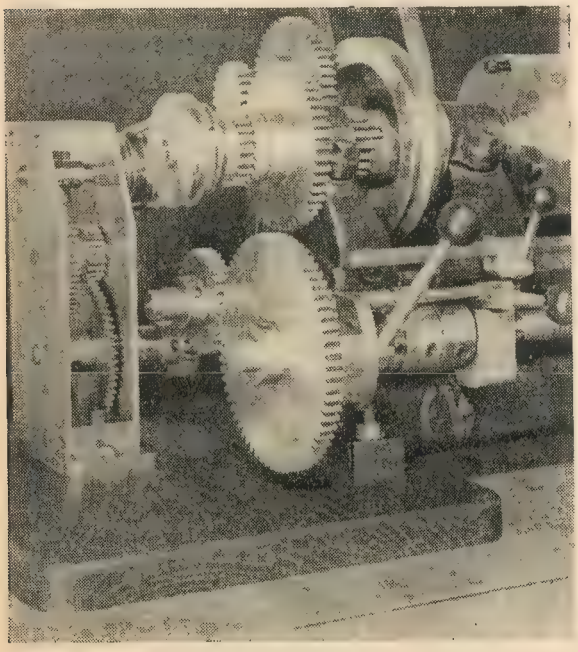

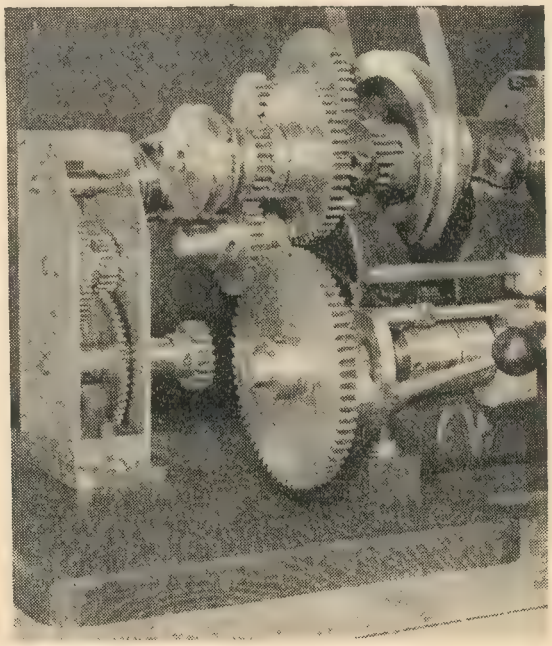

Left, Fig. 1: *The quadrant in the self-act position. Right: The quadrant raised in order to engage with the lathe mandrel gear for screwcutting—in this case,* 26 *t.p.i.*

INDEPENDENT FEED . . .

lathes of the model class; these usually have a left-hand threaded leadscrew with room for two idle wheels on the change gear quadrant, whereas, the EW leadscrew is right-handed and the quadrant allows for for the inclusion of only one idle wheel.

Another peculiarity lies in the fact that the change gears themselves are of No 16 diametral pitch, which is rather coarse when compared with the now almost universal No 20 d.p. for small lathes. (The d.p. number for gears refers to the number of teeth that can be spaced around a 1 in. dia. known as the pitch diameter —not to be confused with the over-all diameter which is slightly larger.)

Thus the 20 t. gear for the EW has an outside diameter of 1⅜ in. while a 20 t. Myford, Grayson, Zyto, to mention a few, has an outside diameter of only 1 1/10 in.

On the EW the large gear teeth, single idle stud position and the right-hand leadscrew are all inter-related with the result that, using only the equipment supplied by the makers (although screw cutting gear trains can be set) a self act of reasonable slowness cannot be set.

The largest reduction that can be set by making the smallest gears drive the biggest is that where a 20 on the lathe spindle drives a 60 on the intermediate stud, this 60 being coupled to a 25 on the same stud driving a 65 on the leadscrew:

$$\frac{20-65}{25-65}$$

this gives a reduction ratio of:

$$\frac{20 \times 25}{60 \times 65} = \frac{5}{39} \text{ or 1 to 7.8}$$

which, in terms of the number of revolutions of the work to each inch of tool travel, with an 8 t.p.i. leadscrew:

$$= 7.8 \times 8 = 62.4$$

which is too fast for a small lathe.

As a matter of interest I tried using a 20 and 100 Myford gears for the second reduction in the gear train, but even this did not make such a worthwhile difference, the feed being 129 revs per inch of travel. I have used feeds of 80 revs per inch with every satisfaction for some free cutting steels and, although a feed of 129 would be useful, it is obviously much better to have a wider average range.

From these figures it may appear that any gearbox for self-act feeds would require a very large reduction ratio, but this is not so because further reductions are introduced by the belt pulleys at the input side and again at the output end where the output gear nearly always drives a gear larger than itself on the leadscrew.

In this case the gearbox contains gears giving a reduction of 16 to 1 while the three speed cones drive the input spindle through pulleys having ratios of 3 to 4 (reduction), 9 to 8 (slight increase for medium feed rates) and 8 to 5 for the faster feeds.

The lower output gear has 20 teeth and as the smallest leadscrew gear which this will be called upon to drive is one of 35 teeth (when the quadrant has been set to cut 14 t.p.i. in the screwcutting position) the fastest over all self-act feed range

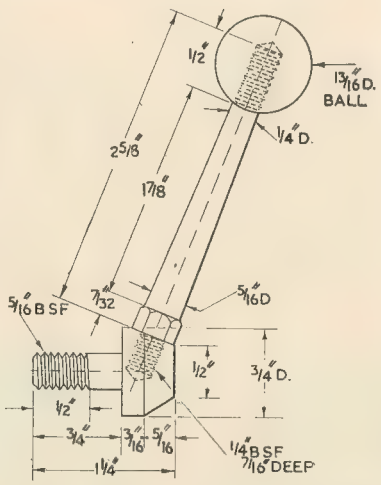

Fig. 2: The lever bolt for the change-gear quadrant

becomes 298, 200 and 140 revs of the work per inch of tool travel.

The designing of a self-act box for the EW did not prove to be quite such an easy task as had been anticipated. It was found impossible to have it at the rear of the headstock, partly owing to the back gears getting in the way and partly due to the short length of the quadrant. It was not reasonably possible to place the slow or output gear of the reduction box close enough to engage with the quadrant gearing under all circumstances, and so it was these factors which decided that the box would have to be positioned to the left of the headstock in the manner shown (Fig. 1).

This picture shows, at the left, the quadrant in the self-act position and, at the right, the screwcutting position where in this particular case, as the gear on the leadscrew has 65 teeth and the gear on the lathe spindle which drives it (through a 35 t. idler) has 20 teeth, the lathe will at once be ready to cut 26 t.p.i.

The feed rates immediately obtainable when the quadrant has been set to cut all the various threads of which the lathe is capable will be found in the table (Fig. 3). It should be understood that the object is not to specially set quadrant gearing to obtain the 36 feed rates shown—such a course would defeat the object of the whole arrangement which is to minimise the time spent in altering quadrant ratios.

Turning to Fig. 1 again, the feed rates here obtainable when in the self-act position (left) are 553, 371 and 260 revs per inch; should the quadrant be set to cut, say, 40 t.p.i. for a different job, the feed rates become 850, 570 and 400, which, although somewhat slow, are still immediately obtainable between cutting threads, and preferable to the unsteadiness of hand feeding.

Initially, when first setting up to use the independent feed it is a good idea to decide either upon the three feed rates preferred for general use and to set the quadrant accordingly by reference to the screwcutting train given at the left (Fig. 3), or to decide upon the screw thread most likely to be required and to accept the feed rates shown at the right and given by the particular gear ratio needed to cut the thread.

On my own lathe I normally have the quadrant set to cut 16 t.p.i., this being a thread which I frequently have to cut. Occasionally I have to alter the quadrant to cut 24 t.p.i.—a matter of a few moments' work substituting a 60 t. gear for the 40 normally kept on the leadscrew and shifting the idle gears to suit. In this case I do not hurry to re-set for 16 t.p.i. but usually make do with the slightly slower self-act range given by the 60 on the leadscrew until it is convenient to revert to "normal."

All the screwcutting gear trains in the table have been specially set and checked with a view to finding the most convenient combinations to ensure that the set-up may be readily driven from either the lathe spindle gear or the s.a. box output gear.

In the lower portion of the table some compound trains are given showing the gearing needed to cut some of the finer threads. Where one gear is shown superimposed upon another it means that they must be so placed upon the intermediate stud on the quadrant. For example, to set for cutting 40 t.p.i., a 20 t. driver on the lathe spindle must be arranged to mesh with a 50 t. on the intermediate stud, this 50 t. gear being pinned or

SIMPLE TRAINS				Immediate self-act Obtainable with Train on left— Revs of work per inch of tool travel			REMARKS
TPI	Driver	Idle stud	Lead-screw	Slow	Med.	Fast	
9	40	35	45	383	257	180	
10	40	,,	50	425	285	200	
11	40	,,	55	468	314	220	
12	40	,,	60	510	342	240	
13	40	,,	65	553	371	260	
14	20	50	35	298	200	140	
16	20	,,	40	340	228	160	
18	20	,,	45	383	257	180	Put 50 idler on first if not there
20	20	40	50	425	285	200	
22	20	,,	55	468	314	220	
24	20	,,	60	510	342	240	
26	20	35	65	553	371	260	
COMPOUND TRAINS							
28	20——	35 30	——60	596	400	280	
30	20——	50 40	——60		428	300	Driving belt for s.a. cannot be used on lowest cone speeds
32	20——	40 30	——60		456	320	
36	20——	45 30	——60		514	360	
40	20——	50 30	——60	850	570	400	
60	20——	50 20	——60	1275	855	600	Requires two 20 t. gears
15	20——	30 40	——50				Cannot be set
25	20——	50 20	——25				Cannot be set 20—50 Needs: 40—50

Fig. 3: A tested screwcutting—and self-act—chart for use with the EW lathe

coupled to a 30 t. gear on the same stud—which, in turn, must mesh with a 60 t. gear on the leadscrew.

It will be noticed that the feeds obtainable when the quadrant is set to cut from 9 to 13 t.p.i. are the same as those resulting when set to cut from 18 to 26 t.p.i. This is because when screwcutting the driver is sometimes a 40 and sometimes a 20 t. gear; in the self-act position the driver gear is always one of 20 t.

To facilitate the freeing of the gear quadrant when changing between the screwcutting and self-acting positions, the original locking bolt was replaced by a lever bolt, details of which are given in the drawing (Fig. 2).

This is made upon very similar lines to the stop rod locking lever recently described, the only minor difference being that in this case a piece of hexagon stock was used for the lever. Of course, most of the hex. was machined away, a small portion only being left at the lower end to facilitate tightening in the boss of the clamp bolt—an operation which has to be performed after this bolt has been screwed home.

This lever should be arranged to lock in a near vertical position when the quadrant is almost horizontal as may be seen at Fig. 1, left. When the quadrant is raised, as the clamp shares some of the motion, the lever tightens in a different position, Fig. 1, right.

● *To be concluded*

RETICULAR ALUMINIUM TIN

A new bearing alloy for better—and cheaper—plain bearings

The introduction of a new type of bearing alloy is announced jointly by the Tin Research Institute and the Glacier Metal Company, who have been working together for some years on its development.

The new bearing alloy contains about 20 per cent of tin, the remainder being aluminium hardened with from one to three per cent of copper. The tin constituent has a structure which is reticular within the continuous aluminium matrix—that is to say, the tin has a structure which is itself continuous without disturbing the continuity of the aluminium. Should metal-to-metal contact occur between a shaft and a bearing with this reticular structure, there is an immediate supply of tin available at the surface to provide a thin soft layer of tin over the aluminium and thus inhibit surface breakdown.

The new alloy, therefore, combines the strength of a continuous aluminium phase with the tin-availability of a comparatively heavy and continuous tin structure. When supplied in the form of steel-backed bearings, it provides a better balance between the opposing demands of high-fatigue strength and low rates of wear than any other known plain bearing.

Furthermore, unlike copper-lead bearings, it needs no lead-based overlay plating to keep shaft wear in check.

A significant feature for large diesel engine applications is that since the alloy contains no free copper there is no danger of copper penetration of steel journals.

Reticular aluminium-tin bearings can, of course, be supplied pre-finished, but since they have no overlay plating they can equally well be supplied semi-finished for boring in place, as is so often necessary or desirable in the case of large stationary diesel engines.

These new bearings have already proved themselves in extensive road and test bed trials carried out over the past three years and, as compared with copper-lead plated types, they will be cheaper to manufacture. ▣

AROUND TH

"MIDDLETON'S STEAM PARTY"

By W. J. Hughes

EACH year in Worcestershire is held a private steam party, when Eric Middleton invites his many friends along to his home to ride in or on, to steer or drive, or just to admire, engines in steam. Eric has several engines of his own, but since some of his friends always bring theirs as well, then it becomes a party indeed.

Pride of place invariably goes to his Burrell showman's engine, No 3909 *Winston Churchill*, which after some years of dismantling, re-building, replacing parts and re-painting, is now equal to new. Rocking gently, with belt slapping and generator humming, she presided over the assembly like a veritable queen.

The "princess" may well be said to be the beautifully reconditioned Ruston Proctor *Lincoln Imp* tractor No 52607. Owned by H. J. Bentley, of Worcester, this engine was built in 1921. She too has been stripped down, and a wonderful job has been made of her re-building, repainting and re-lining.

I had a go at steering my old favourite, the Fowler general-purpose engine No 11246 *Little Mary*, with 18-year-old Mark Rigg at the regulator. With a keen interest in engines, Mark is fortunate in living reasonably close by, and has spent many happy hours in helping Mr Middleton.

Country craftsman

In contrast with Mark's youth were the seventy-seven years of Mr C. C. Williams, who was tending Mr Middleton's 5 n.h.p. Humphries portable. Trained originally as a wheelwright, Mr Williams is a typical country craftsman who in his time has turned his hand to blacksmithing, gatemaking, building repairs—and engine overhauling. Even now he is building a pair of oak gates in his vigorous retirement.

Mr Williams was also looking after a small Tidman vertical engine (steamed from the portable) which originally drove some fairground organ. Found by Mr Middleton in a state of decrepitude, it has been re-bored, the crank journals re-turned, new bearings made and a new governor built. An interesting feature of this engine is that the exhaust passes from the valve chest down one of the columns to the orifice under the base, a logical idea for an engine normally mounted on the smokebox of the main roundabout engine.

Another old acquaintance was Arthur Wedgwood, of Blackpool, who had previously driven down his brother's Sentinel wagon *Shrewsbury Belle* from Bury in Lancashire.

Working models

Eric Middleton's compound undertype model engine was in steam, driving a generator. Built to the Greenly design published in MODEL ENGINEER about half-a-century ago, this is a sturdy and well-built model. Another model in steam was an old overtype semi-portable, about 2 in. bore by 3½ in. stroke, owned by F. C. Lamb and tended by W. J. H. Hardy. The Watt-type governor of this engine was particularly effective.

Finally, much interest was created by W. Carey-Walker, whose freelance compound traction engine model was driving a working threshing machine. ▣

Arthur Wedgwood supervises coaling-up on Fowler No 11246 LITTLE MARY

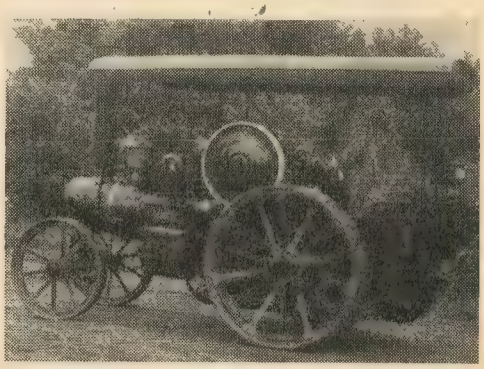

Beautifully reconditioned, H. J. Bentley's Ruston Proctor tractor was much admired

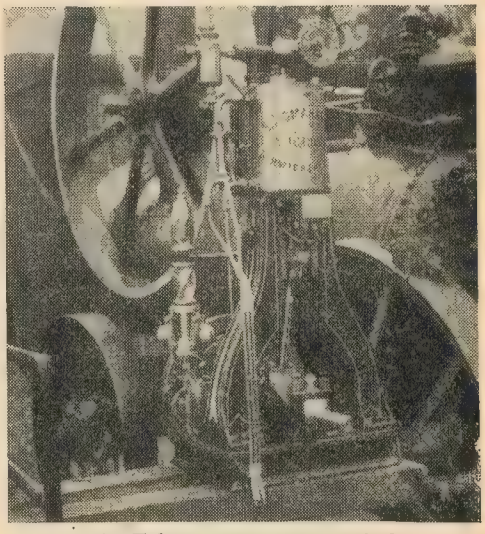

The Tidman organ engine which was rebuilt by Eric Middleton

Th N

G N

HE RALLIES

WORCESTER SHOW

By M. Newman

he very fine Burrell showman's engine, o 3909, owned by the host Eric Middleton

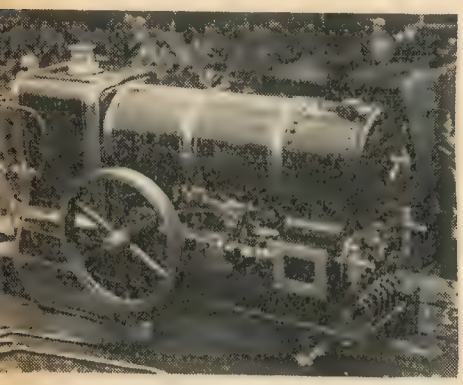

The model compound under-type semi-portable built by Eric Middleton

eneral-purpose single cylinder Fowler, o 11246, LITTLE MARY. *It is of 6 n.h.p.*

Foden steam wagon owned by Streetly Garage, near Birmingham. Notice the 8 m.p.h. speed limit

Below: Burrell showman's and road locomotive owned by Mr C. T. J. Nichols, engineer, of Gloucester

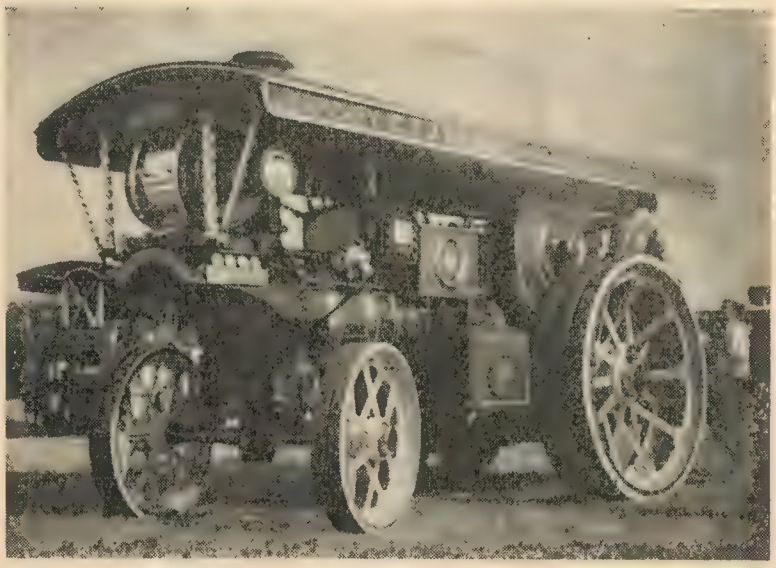

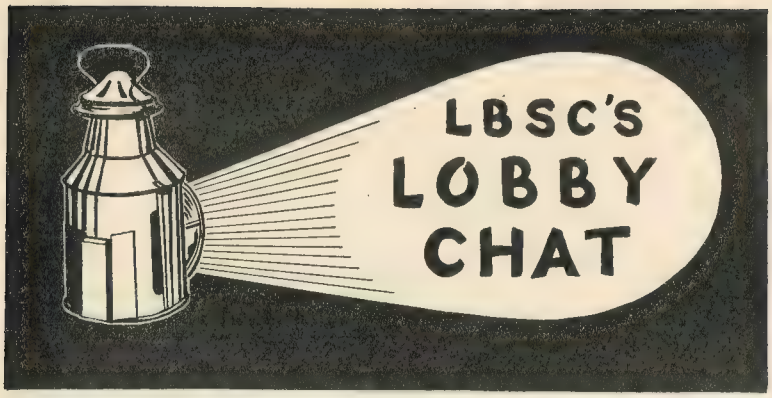

JUST at the moment I don't feel much like swotting at my drawing-board and grinding out my usual quota of locomotive-building instructions—I guess that *Anno Domini* is taking its toll! —and by the time these notes appear in print you'll all be thinking of other things more appropriate to the season. I, therefore, propose that we adjourn to the lobby for a cup of the enginemen's best friend and congenial chinwag.

Speaking of the enginemen's best friend, don't run away with the idea that this is cold tea with no milk in it. Not on your life! The drivers and firemen on the Look-Bill-and-See-Charlie's-Rabbits would have soon turned up their noses, and probably added a few new words and phrases to the dictionary of railroad Esperanto, if anyone had put that interpretation on one of their travelling refreshers. Here are the facts, "straight from the horse's mouth."

Most of the enginemen had what they called a tea bottle which wasn't a bottle at all, but an enamelled can, blue outside and white inside. The cover was shaped like a cup, complete with handle. The usual capacity was about a quart (my own was), although some of the main line goods drivers and firemen had larger cans as they were longer on the road. These were filled up at home before leaving for a turn of duty.

The tea we preferred was of medium strength, sweetened with sugar and condensed milk. Nobody used cows' milk as it had a tendency to turn sour after a while. On the LBSCR engines there was an iron tray, known as a flareplate, right over the firehole door. The first thing that enginemen did, when booking on, was to take a look at the water gauge, and the second was to put the can of tea on the flareplate; and there it stayed all through the run, except when temporarily removed for the purpose of lubricating a dry throat. It doesn't need a Sherlock Holmes to deduce that the contents of the can never had a chance of becoming cold!

With condensed milk in it, the tea never acquired the "stewed" taste, which is noticeable very often in tea taken from an urn or other receptacle when it has been kept hot for a long time (I've heard folk complain of this in refreshment rooms) and as a matter of fact I still have condensed milk in my tea, as I like it better than the stuff the milkman leaves in a bottle.

As a seasonal break from routine work, LBSC this week indulges in a few reminiscences and other locomotive chit chat

The cleaner boys and the shed staff always had their tea fresh made, and incidentally it was never called tea, but "brew" or "stingo." It was invariably made in a beer can. One of these holding a quart could be purchased at the local pub for three-halfpence.

When the looped wire handle was cut short and laid straight across the top of the can, it would just enter the standard-size firehole on the Brighton engines. To support it, the boys used a piece of thin steel rod usually cut from a boiler-washing rod, with one end bent to form a handle, and the other into a small hook. The length was between three and four feet.

The method of brewing would shock a modern housewife! The boys mixed the required quantity of tea with some sugar (lump or granulated) in a piece of newspaper, filled the brew-can with water, and put it through the firehole ring on the end of the stingo-rod, holding that in one hand and the paper containing the tea and sugar in the other.

The water boiled in a matter of seconds, and then it was a case of "sharp's the word and quick's the action." The aim was to pull the can out of the firehole without spilling any of the contents, and dump the tea and sugar into it before the water stopped bubbling. If this was accomplished, the result was considered a good brew. I'll say it was, too!

Condensed milk was added by punching two holes in the top of the tin at opposite sides of the diameter, one to let milk out and the other to let air in. This served another purpose as the air in a locomotive shed isn't exactly as pure and clean as it is in the middle of the Atlantic Ocean.

Pussy liked milk!

There was something else, too! At one of the sheds there was a big tom-cat, a really splendid specimen of the feline race, whose duty it was to keep rats away from the pits, a job which he performed most admirably. He was a great favourite with the staff and could usually be found in one of the lobbies during meal times, begging for odd bits, although he was "on the staff" and regularly fed by the storekeeper.

He had a weakness for condensed milk, and if anybody had inadvertently left an open tin lying around, Tommy would have had his tongue in it before you could say "pussyfoot." As it was, he was caught more than once licking at the holes in the top of a punctured tin, and as he had brains and knew how to use them, he would knock a tin over and lick up what oozed out—if given the opportunity.

He liked his cup of the enginemen's best friend, too, and the boys often gave him a "damp" as they called it, in the lid of a sandbox or anything else handy. In Michael Reynolds's book *Engine-driving Life* there is an account of a dog who strayed into Euston Station, homeless and hungry, and was adopted by one of the LNWR drivers who named him Snatchbury, and frequently took him on main line journeys on the engine. Snatchbury didn't have anything on Tommy, for that worthy travelled all over the LBSCR without any taking!

This is how it came about. After Tommy had patrolled his beat around the pits, he would sometimes jump up on top of a warm tender and curl up in the corner of the coping for what the boys called a "pack-up." The Stroudley engines utilised part of the exhaust steam to warm the feedwater in the tanks and tenders, and naturally

the tops became comfortably warm.

Tommy never packed up on a Billinton engine's tender, as they were always cold. They didn't have the exhaust heating pipes, the boilers having injector feed, which works best with cold water—as those who have fitted my little injectors know well.

Tommy didn't, of course, know what time the engine was due out, and didn't trouble either. If it went out before he felt like getting up, he just went with it, and that was that. If the enginemen spotted him, they never disturbed him, for once away from the shed he wouldn't leave the engine until it got back again.

If the weather was fine he would stay on the tender, but if cold or wet he would climb over the coal to the cab, and curl up in the recess between the boiler and the side of the cab. The storekeeper always put his plate of food down at regular times, and Tommy was seldom late for meals, so when he didn't turn up, it was a sure sign he was "absent without leave."

If the storekeeper went to the office and said: "Tommy's hopped it again," the clerk would ring up the shed at Brighton, Eastbourne, Hastings or anywhere that a Stroudley engine might be going, and ask: "Seen our moggy around there?" Back would come the answer from one of them: "Yes, he's on Jack Robinson's engine, left here at 1.45."

The storekeeper put the cat's food down again when the engine was due home, and as soon as it arrived Tommy was off like a shot, making a bee-line for his rations. The only exception was after a trip to Newhaven, where they always filled him well up with fish. The odds are a thousand dollars to a pinch of snuff that nothing like that would be possible on British Railways at the present time!

Hunting from the footplate

Writing about the cat calls to mind another little animal that wears a fur coat, and which on occasions provided LBSCR enginemen with a tasty meal.

Around the turn of the century the sides of the cutting near Haywards Heath swarmed with rabbits; there must have been hundreds of burrows. It is said that familiarity breeds contempt, and it certainly did in the case of the rabbits, for they became so used to trains going by that they came out on the bank quite openly and never attempted to run away when a train passed. Then one of the enginemen had a brain wave and started a form of sport that was quickly taken up by most of the goods engine crews on that section of line.

The party in question was slowing for an adverse signal when he saw a big bunny fairly close to the line, so he grabbed a nugget of coal and took a potshot at it. He scored a bull and knocked the rabbit clean out, so hastily scribbled a note asking any porter at the station to pick up the rabbit and throw it on the tender of engine No so-and-so when returning at such-and-such a time. This would be quite easy as a goods train would only be going very slowly on the rising gradient.

The note was thrown out, wrapped around a piece of coal, as the train went through the station, and the porter who picked it up promptly retrieved the rabbit and did as requested.

The rabbit provided the driver with his next day's dinner and when he told the tale in the lobby, the idea was promptly taken up, with the result that there were numerous casualties among the rabbit population in the period following, and a corresponding number of free meals for the enginemen.

If more than one rabbit was knocked out at a time, the station staff shared the spoil with the enginemen. Some of the enginemen became expert shots, and some of them also tried catapults; but tell it not in Gath, it was rumoured that enough coal was

picked up from the bank after the station was closed, to keep some of the staff's home fires burning for quite a considerable time !

Scallops formed another delicacy which many enginemen enjoyed, either "buckshee," as the Tommies (two-legged variety) used to say during the Kaiser's war, or at a very cheap rate indeed. Anybody who worked the night goods to Newhaven, or the Continental boat train, and had an hour or two to spare before making the return trip, could take the pail off their tender, go along the shore, and fill it with scallops, just for the trouble of collecting them. Good big ones, too.

Naturally, even with the best appetites in the world, the driver and fireman couldn't eat the contents of the pail, so when they returned to their home sheds they used to distribute the surplus to all and sundry, at two or three for a penny, and they did a roaring trade.

Locomotive cooking

Personally I was pretty fond of scallops—still am !—and used to eat them raw, like oysters, when on the engine; but I fried them if I took any home. However, some of the enginemen would fry them on the coal shovel, just as they fried bacon and eggs, or grilled chops and steaks. The shovels were absolutely clean, in fact cleaner than some frying-pans that I have seen, as the coal kept part of the blade scoured bright. A rub with a piece of clean waste gave us a perfect cooking utensil, and anything placed on the bright part of the blade and held just inside the firehole, cooked perfectly in two wags of a dog's tail.

In fact very few enginemen bothered to take cooked food in their tommy-bags. Most of the sheds were in populated districts where there were plenty of shops, and there was no sense in worrying "mum" to prepare food when you could nip into the provision store on your way to work and get a lovely back rasher of bacon for three-halfpence, and a big fresh egg for a penny, and fresh new rolls at the baker's for a halfpenny each.

We brought butter from home in a small tin or jar. The scallop-chefs used to put a little bit of butter on the shovel, wash the fish under the tender tap in the shell, then dust it with flour which they brought from home in a tin with a perforated lid, pop it on the shovel, and inside of a couple of minutes there was a delicious item which today would cost several shillings at an average hotel.

Even on the suburban tank engines there was usually time to do a spot of footplate cookery between trains. When a train arrived at London Bridge or Victoria, and had decanted its load, the station pilot (official name for the shunting engine) pulled the empty coaches out and the engine followed, running into one of the sidings to wait until it was time to work the next trip.

In off-peak hours this would be from 20 to 30 minutes, and that was plenty of time to have a snack. There was little time to spare during the rush hours, morning and evening, but the engine crews arranged their personal stoking-up times to allow for that. Most of them were very hearty eaters, especially the younger firemen. What with the open-air life, and the physical exertion entailed by ladling black diamonds into the firebox, they needed plenty to keep them up to scratch. They were a healthy lot, too; there were very few cases of absenteeism caused by illness.

Many years ago, more than I care to remember, I was admitted to membership of a certain organisation that held periodical banquets at the Cafe Royal in Regent Street, London, and I attended a few of them. They were quite swell affairs and I felt sadly out of place, for more reasons than one, and as I tried to wade through the several courses I sighed for the corner of a Brighton engine cab, with a shovel-cooked meal, or a new roll, cut in half and buttered, plus a lump of cheese and a big tomato, and the merry old tea can.

I don't have to tell you which to me was the more enjoyable meal. Even now, when my few personal friends pay me a visit at long intervals, we have a "footplate lunch," sitting by the heating boiler, putting our teacups on the benches and holding he plates on our knees, chatting away all the time on congenial subjects. We don't take much notice of the Milly-Amp trains passing along the railway bank, but if we hear the puffing of a steam locomotive—nuff sed !

Information in a nutshell

I often receive direct queries, the answers to which may be of general interest; here are a few.

Cylinder drain cocks are not a necessity on *Virginia*, or any other engine of similar or smaller size having slide-valve cylinders. Had they been piston-valve cylinders they *would* have been necessary. The reason is that when water is trapped in a slide-valve cylinder it lifts the valve off the port-face and escapes, but it cannot perform the same antic with piston-valves, so either drain cocks must be fitted, or relief valves as in full size engines.

These are like miniature safety valves set to blow at a few pounds higher than boiler pressure and screwed into the cylinder covers. They are illustrated in the *Live Steam Book*.

A locomotive like *Tich* could be made to run around a 6 ft circle by widening the wheel treads and spreading the rail gauge—but I don't recommend it !

The blueprints of my $2\frac{1}{2}$ in. gauge three-cylinder *Green Arrow* show the crank setting for the inclined cylinder which is needed to get six even beats per revolution. The similar-size *Olympiade* has three sets of valve gear and each valve can be set separately.

The Holcroft conjugated gear on my engine *Tugboat Annie* has given every satisfaction, and still shows no appreciable wear after years of service, the eight beats per turn being quite distinct at starting, though they merge into a purr after a few revolutions.

Miss Lorna Procter recently took a photograph of her as now running (page 837). The only casualty is the loss of the hose on the leading brake pipe. ▣

BRITAIN'S FIRST DIESEL-HYDRAULIC MAIN LINE LOCOMOTIVE

BRITAIN'S first main line diesel locomotive to employ hydraulic transmission was completed recently at the Queens Park Works of the North British Locomotive Company. Running-in trials on British Railways local lines in the Glasgow area will precede the transfer to the Western Region, in which it will go into regular service in due course.

Locomotive No D600—it has yet to receive a name—is of 2,000 h.p. and it weighs 116 tons. It is the first unit in this high-power range to be completed out of the initial programme of 174 main line diesels ordered under the Railway Modernisation Plan.

The diesel-hydraulic transmission principle has been used with success in BR shunting locomotives, but this is its first application in this country to a type of locomotive designed for main line duty, and its performance under British conditions will be watched with particular interest in view of its successful application abroad.

No D600 embodies the NBL/Voith design of hydraulic transmission and NBL/MAN engines, which are being manufactured by the North British Locomotive Company in Glasgow under licence. The British Transport Commission have so far placed orders with the North British Locomotive Company for 63 such locomotives—five of 2,000 h.p., and 58 of 1,000 h.p.

FIXED STEADY

for a lathe

J. E. FOSTER describes in full detail how he constructed this very useful accessory

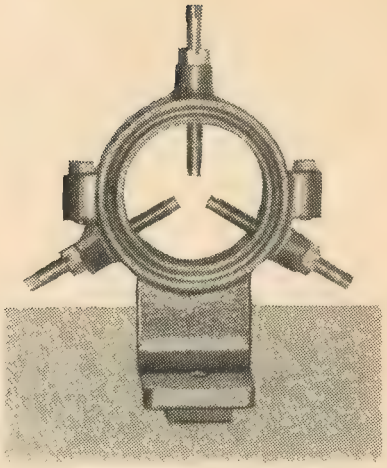

My heading picture and drawings illustrate a fixed steady which I have made for a 3½ in. centre lathe.

The following three points make the design simple for constructing as compared with the usual proprietary type:

1 Three brass adjusting screws in lieu of brass sliding bars in rectangular slots which require milling or shaping.

2 The upper half is fixed by two screws in lieu of one end being hinged, which latter is more necessary for rapid production.

3 The portion of the foot which fits and slides in the lathe bed is separate, enabling the foot itself being faced in the lathe in lieu of having to be milled or shaped.

The body (Fig. 1*A*) was cast in iron in one piece, the ring portion shown 3½ in. dia. being made 3¾ in. vertically, i.e. at right angles to the joint, to allow for sawing at the joint and machining the faces of the joint.

The first operation was to Slocombe drill a centre in the top boss and one directly opposite at *E* in the foot, and facing the foot and boss between centres in the lathe. The halves were then separated by a hacksaw, and the 13/32 in. hole drilled in the foot. The top half was bolted to an angle plate on the faceplate and the joint machined. The bottom half joint was machined by bolting the foot direct to the faceplate.

The footplate *F*, shown 1⅛ in. wide, was made a good sliding fit in the lathe bed (in this case a Grayson) and fixed to the foot of the body by two ⅛ in. taper pins driven from the bottom and riveted at the top.

The next operation was to bore and face the body, and the set-up to do this consisted of the top slide of the lathe, with the tool post removed, bolted to the faceplate (Fig. 2). In cases where the top slide is not suitable for fixing to the faceplate it might be possible to fix the foot of a vertical slide to an angle plate on the faceplate.

It will be seen that the body cannot be clamped direct to the faceplate and bored and faced in the usual way unless the lathe has a wide gap.

The toolholder *G* holds a ¼ in. dia. silver steel straight tool for facing, and a bent one, shown dotted, for boring. For facing, the feed was put on by tapping a cross bar *H* (this replaces the normal handle) as it comes round during rotation. The cut was put on by placing a bar *J* between the body of the steady and the cross slide as shown, the nut *K* being first slackened and tightened after moving the cross slide by the leadscrew.

The spring washer, under the nut *K*, is to allow the nut to be tightened just enough to give a frictional resistance between the foot and the lathe bed when cutting the grooves *LL* by a more rounded straight tool and boring with the bent tool. For the latter, the cut is put on by the cross bar *H*. The grooves are only a refinement and are not necessary.

The final operation was to drill and tap the three bosses for the adjusting

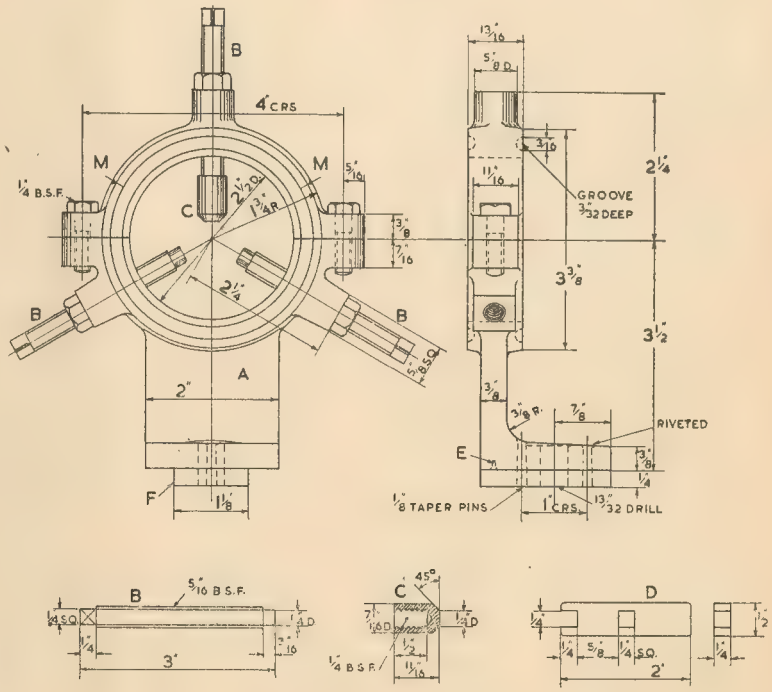

FIG. 1

screws. To drill between centres two centre pops were made at *MM* (Fig. 1*A*) diametrically opposite the centre—drilled lower bosses for the screws *B*, and to ensure reasonable accuracy the body was rotated occasionally while being drilled. The top screw was drilled against the tailstock pad. The alternative would be to use the centres as a set-up and clamp the body to the top slide of the lathe.

The adjusting screws 1*B* are made of brass bar. The three heads (Fig. 1*C*) are made of red fibre; these are used when the work is of soft brass or of aluminium and other soft metals. The key (Fig. 1*D*) is of mild steel and is used for turning the screws.

If any reader wishes to make this fixed steady I will be pleased to lend him my wood pattern. I will also be happy to add $\frac{1}{8}$ in. to the top of the foot if the reader's lathe centre is $3\frac{3}{8}$ in., or add $\frac{1}{8}$ in. to the bottom face if $3\frac{5}{8}$ in. centres. ▣

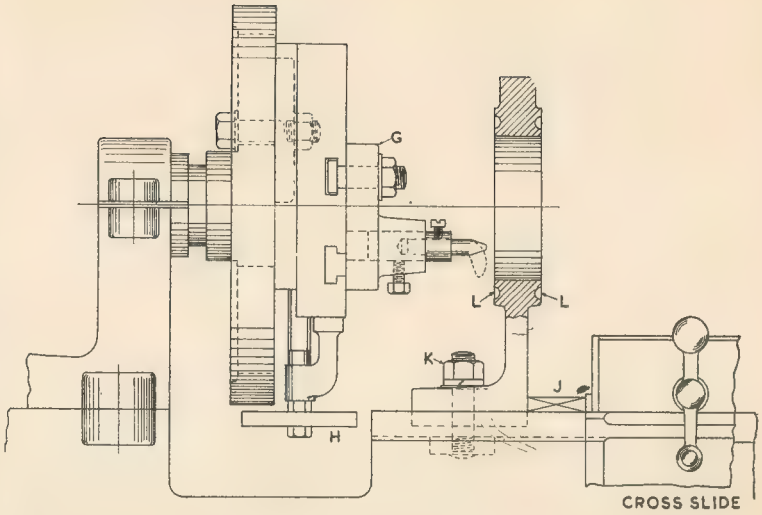

FIG. 2

ME EXHIBITION AT NEWPORT

SCATTERED about the streets of Newport—"capital" of the Isle of Wight—were several small envelopes. Addressed to "the lucky finder," each bore a message in rhyme. Inside the envelopes were complimentary tickets for the Isle of Wight Model Engineering Society's seventeenth annual exhibition at Newport.

This was but one of several publicity stunts by a live-wire committee. Some members became mobile sandwichboard men by fixing cardboard poster cut-outs, advertising the show, to the frames of their bicycles. Another device was the announcement of the exhibition in gold letters high above the High Street.

The show was worthy of the advance notice it received. A wide variety of exhibits included locomotives, ships, yachts, aircraft, railways, buildings, workshop equipment and an astronomical section.

A notable triumph was scored by L. Trausel, a 72-year-old Newport artist who only took up modelling seriously about four years ago. He was showing part of an OO gauge layout for the third time.

Last year the layout won the Championship Challenge Cup for members' best model, and the A. E. King Cup for the best railway model. The general layout was ineligible this year, but the latest addition alone was sufficient to win the two trophies again for Mr Trausel.

The addition was a quarry and brickworks, executed with an artist's eye to detail and colour. The walls around the brickworks, hand-engraved to simulate the natural stone; the stunted trees on the hewn cliff top, leaning Pisa-like as by the ravages of the wind—all was carefully observed.

Trees—poplar, pine and silver birch—were "planted" in the general railway layout adjoining the quarry. They were made from actual twigs, from shreds of loofah, dyed, and from dried sawdust and tea leaves!

A railway layout by D. Martin, of Cowes, which was started during the year and is expected to take two or three years to complete, was in working order for the exhibition. This was no mean achievement, considering that the track was a complicated affair on four levels. The track is hand-made, with each individual sleeper soldered.

In the marine section an outstanding exhibit was a Catamaran sailing vessel with a swivelling mast and adjustable vane steering gear. It was built by P. Thwaites to his own design and included a crew of two, the figures moving with the steering.

The Ryde Model Yacht Club, faithful supporters of the exhibition, had a stand displaying graceful models of the international marblehead and national 10-rater classes. This club has some of the finest racing models in the country today.

A junior, B. Evans, triumphed with a Curtiss Gulf Hawk monoplane. He won not only the A. V. Roe Junior Cup but the Spanner Challenge Cup open to all members for the best exhibit in the Aircraft, General or Workshop Equipment classes. His model of a pre-war American pursuit flight craft was powered by a $1\frac{1}{2}$ c.c. diesel motor and capable of a speed of 50 m.p.h. No machine tools were used in its construction.

P. J. Caseley, holder, won the cup for apprentices of Saunders-Roe Ltd, the famous aircraft builders of Cowes. His was a stunt model aircraft, 10 c.c. control line, 6 ft wingspan, which flies on 75 lines at 65 m.p.h.

For the second year, there was an astronomical section. Here, an excellent 6 in. Newtonian portable reflector telescope won the Visitor's Challenge Cup for its joint designer-builders, P. Wroath and J. Mockford.

The telescope (about 7 ft in length and finished in a superb grey gloss) was built mostly from spare and odd pieces of material. The mirror was made from a ship's porthole glass, and part of the focusing mount from a magic lantern. The lead counterweight, weighing 10 lb., was cast in an old paint tin. The mirror took many months to grind, polish and figure to a parabloid within a few millionths of an inch. Finally, it was silvered by Brashear's method.

The telescope's eyepieces give a ange of X24 to perhaps 350 on good seeing nights. High powers permit study of the planets and fine lunar detail; low powers give fine views of starfields, nebulae and comets.

When the equatorial mounting is properly adjusted, the telescope is set at an axis parallel to that of the earth. There is a camera attachment, and on view were photographs of the moon in various stages and a trial series of exposure times of Jupiter.—**L. R. Longhurst.** ▣

A BEGINNER BEGINS . . .

By E. V. Dalpra

INSPIRED and fascinated by the achievements of model engineering acquaintances, I bought myself a second-hand lathe. It bore the name of a well-known maker; but it was a model, I was to learn later, that was notorious for its chatter !

Being a novice, I assumed at first that I was at fault, but it transpired that even the most experienced "turners" achieved only little better results.

When the work was turned between centres, however, quite a good cut and finish could be obtained. This seemed to indicate that the saddle or cross slide was not the cause of the trouble. All that could be at fault, then, was the headstock assembly.

Failure of contact

Edgar T. Westbury, in the *ME Lathe Manual*, commented that one of the most prolific causes of chatter was when bushes, following their fitting in the headstock, failed to make really good contact with the casting. My headstock was fitted with a 1 in. dia. mandrel running in split bronze bushes fitted into the split casting. Could this be the trouble ?

At this stage a knowledgeable friend looked at the lathe. He formed the opinion that, considering the amount of overhang, the 1 in. dia. mandrel was "whipping"—it being weakened rather pointlessly by a $\frac{9}{16}$ in. dia. hole bored through it and a No 2 MT in its nose.

The answer seemed to lay in scrapping the bushes, then making a mandrel $\frac{3}{16}$ in. larger in diameter than the original, and to run it directly in the casting. Here again the *ME Lathe Manual* stated that although a mild steel mandrel running in cast iron was frowned upon it was perfectly suitable for normal amateur use provided it was kept well lubricated. This decided me to try my luck and carry through the modification.

The mandrel was turned from $1\frac{3}{4}$ in. dia. free cutting mild steel, running between centres. The back end was screw cut and an end play adjusting nut made to suit. This was faced while screwed on the mandrel. The nose end was left to be machined when in position.

Lining headstock casting

As the lathe turner "taper," the next move was to line the headstock casting in relation to the lathe bed. To facilitate this a test bar was made in the following manner:

An old 1 in. dia. car half-shaft was cut to the maximum length that the lathe would turn between centres, duly centred and run this way. By careful adjustment of the tailstock this was ultimately turned true for its entire length. Next, two brass bushes were bored out to a tight fit on this shaft and soft soldered—one at the extreme end and the other the same distance from it that the headstock bearings were apart (see diagram).

This assembly was again placed between centres and the peripheries of the brass bushes turned down to $1\frac{3}{16}$ in. the new mandrel size. I now had a straight bar, with two concentric bushes that would fit in the headstock in place of the proposed mandrel and extended 14 in. over the lathe bed.

With this bar set in position, the headstock securing bolts were slackened to allow the whole headstock to be swivelled until the bar ran parallel to the lathe bed. A Unique gauge bolted to the saddle at centre height was run along the length of the bar and, after much tightening, loosening, checking and repeating of the performance, the desired degree of accuracy was achieved. I eventually settled for a discrepancy of 0.0015 in. over a 13 in. run.

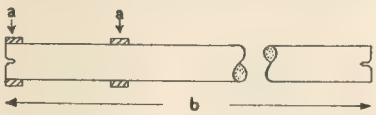

a: *Bushes soft soldered in position the distance apart of the headstock bearings. Turned after between centres to a good fit in the headstock.* b: *Maximum length that can be accommodated between centres*

As luck would have it, the height above the lathe bed was found to be quite satisfactorily in line in proportion to the bed, and this was measured by having the Unique gauge in contact with the top of the bar.

The three-cone pulley and the respective back gears were bored out to the new larger diameter by a friend on another lathe. Here a snag appeared inasmuch that there was insufficient metal on the 30 t. wheel to allow it to be so bored. A 35 t. gear was substituted, and its counterpart on the back gear proper reduced by five teeth accordingly.

The test

Everything was now assembled in its proper place, with the mandrel nose, turned and screwcut. Chuck plates were re-registered, the three-jaw chuck screwed on. The same 4 in. length of 1 in. steel that I had previously found impossible to turn without tailstock support, was put in the chuck—and, behold, it turned perfectly. A 3/32 in. cut or a fine finishing cut could be accomplished with equal ease and with *no* sign of chatter.

The mandrel was next drilled through to pass a $\frac{3}{8}$ in. bar; it was done quite simply by drilling as far from the nose inwards as the drill would permit, then reversing the mandrel in the headstock casting—both bearings are the same size—and completing it from the other end. No particular degree of accuracy was needed here. Finally, with a D-bit the nose was bored to suit a No 1 MT. This did not weaken the mandrel to make any appreciable difference to its turning ability.

At a later date when the mandrel has worn a little I propose having the bearing surfaces heavily dull chromed; then with a split soft metal lap will restore it to a good fit. This will, I hope, give years of good service.

In conclusion

The purpose of this article is to try and give encouragement to the beginner who buys a lathe and finds it pretty well useless. To him I say: Have a go ! He can't possibly have more qualms than I about undertaking such a task. ▣

BUILD YOUR OWN BOAT

Visitors to the Fourth National Boat Show at Olympia from January 1 to 11 will have an opportunity of seeing the many kinds of boats which the amateur can build in his backyard.

This should be of great interest to the home engineer who can probably build a small i.c. power unit to drive a launch-type craft.

The exhibition, organised by the *Daily Express*, will display over 200 craft, from ocean racers to water caravans.

An improved tailstock turret—I

EXACTUS describes a useful lathe accessory for saving time on repetition work, embodying original features of design, and simplified methods of construction

MANY types of multiple fixtures to carry pre-set tools have been devised to extend the scope of the engineer's lathe and speed up production. This series of articles will describe the construction of a four- or six-station turret for mounting in the tailstock barrel socket, designed specially to suit the requirements of ME readers, and having important advantages over the conventional type.

The work was carried out on the ML7, for which this holder is basically designed, but don't let that put you off. It can be adapted to suit almost any kind of lathe from 2½ in. upwards.

Its main features are six tool stations and positioning leg to the lathe bed to maintain correct alignment. Those who like an interesting turning job will get many hours of pleasure in its making.

I made patterns for my two castings, and it is hoped that shortly one of our advertisers might make them available. Those who wish to make their own patterns should not experience any difficulty.

In Fig. 1 can be seen the pattern alongside the casting giving a clear indication that there is nothing complicated about it.

The first casting to machine is the small one, the tool holder. Hold it by its chucking piece in the three-jaw and face across the bottom until it cleans up (Fig. 2). With the same tool reduce the diameter of the casting to 3⅛ in.

Now centre drill the bottom face and starting with a small drill, about a ¼ in., make a hole 1¼ in. deep and open it up to ½ in. dia.

Remove from the chuck and cut off the chucking piece with a hacksaw. Change the chuck jaws so that you can grip the casting on its 3⅛ in. dia. and set the tool to face off the boss that has just parted from the chucking piece until the distance through the ½ in. hole measures ⅞ in. deep.

The next stage is to machine the angles. A far greater degree of accuracy is assured if all the machining can be done without disturbing the casting. I did this by making a mandrel that enabled me to machine every angle. If possible make the mandrel from a piece of solid material. I used a piece of 1⅝ in. dia. bar and reduced 1¼ in. of its length to ½ in. dia. so that the casting slid over.

When approaching the finished diameter check it with the casting in case the drill cut a little on the large size, and turn the mandrel to suit. Should you find this is the case, make a note of the size of the mandrel for future reference when you come to make the centre stud.

Turn $\frac{7}{16}$ in. of the ½ in. dia to $\frac{5}{16}$ in. dia. and cut a BSF or Whitworth thread. The finished mandrel should look like the one in Fig. 3.

Fig. 3: The mandrel

You can now machine all the angles in comfort.

First set the topslide to machine the bottom 30 deg. angle. You can check whether you have removed the correct amount by placing a straight edge along the bottom face and measuring to where the cut commenced. The finished distance should be ¼ in. In

Fig. 1: The pattern and castings

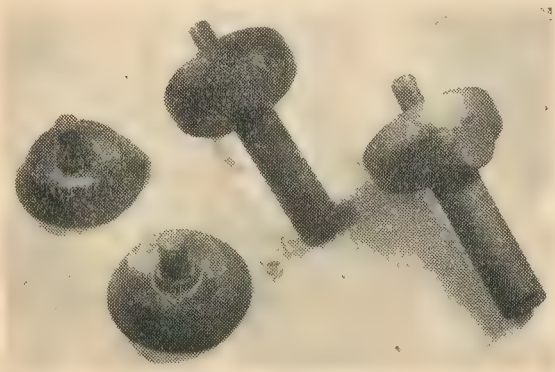

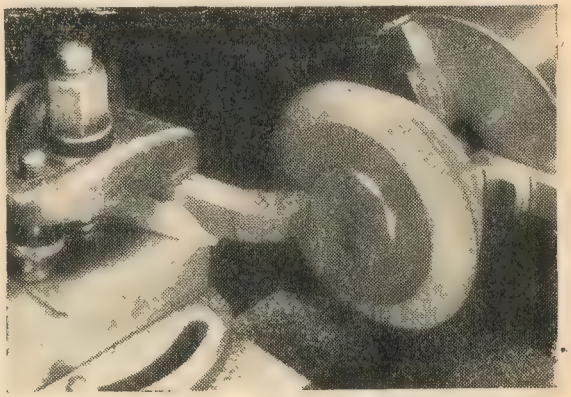

Fig. 2: Machining the bottom face

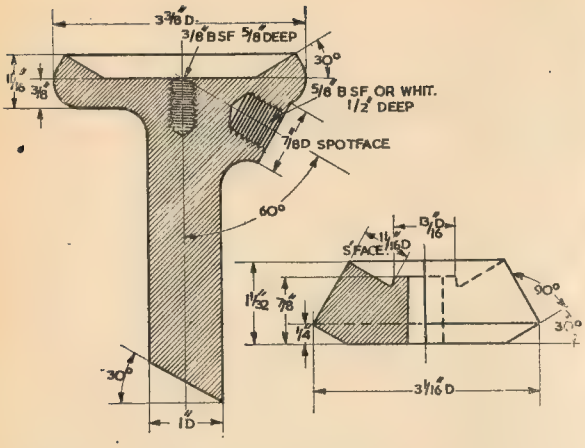

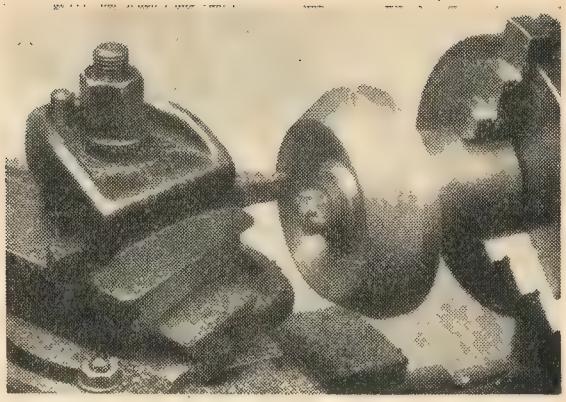

Fig. 4 is illustrated the amount of clearance. When completed, keep the topslide at the same angle but reset the tool to machine the top face (Fig. 5).

Check for removal of the correct amount with a pair of outside callipers. When it is down to $\frac{15}{16}$ in. the finished size and you have blended the bottom with a small radius into the boss, set the topslide to do the 60 deg. face.

Fig. 4: Machining the 30 deg. angle bottom face

Remove sufficient metal until the $3\frac{1}{8}$ in. dia. becomes a very fine line. This completes all the turning on the tool holder.

Now to come to the main casting. Hold in the three-jaw by the end opposite the chucking piece, and centre drill. Remove the drill chuck and insert a hardened centre. Bring into position to steady the casting while the chucking piece is trued (Fig. 6) making sure you don't go under 33/64 in. dia.

When it is cleaned up turn the casting round, holding it by the chucking piece this time. Repeat the operation as before, centring the end and take the diameter of the locating leg down to 1 in. as far as the boss. With both ends now cleaned up and centred, remove the casting from the chuck and reverse it, holding it by the locating leg as in the first instance.

You will find that you have the added advantage of working closer to the chuck, as the reduced diameter allows the work to enter deeper.

Position the tailstock centre and set the topslide round for turning the 30 deg. angle.

First take a cut along the chucking piece until it is $\frac{1}{2}$ in. dia. so that the tool holder casting can slide over it. If the hole is over $\frac{1}{2}$ in. turn the chucking piece to suit (you will know the size from the mandrel) then turn the 30 deg. angle seating and facing across.

When it is down to size try the holder on its seating, and if it fouls the bottom remove the holder and take a light cut across. If it does seat correctly set the topslide to cut the 60 deg. angle, on the outside of the main casting.

When I did mine I slid my tool holder on to the chucking piece (Fig. 7) so that the two blended in without producing a step.

The next step is to remove the chucking piece as it is no longer required. Cut it off with a hacksaw and face across flush with the bottom. Centre drill and drill a letter O hole, then tap out $\frac{3}{8}$ in. BSF or Whitworth, $\frac{5}{8}$ in. deep.

● *To be continued*

Above, right, Fig. 5: Machining 30 deg. angle on the top face

Above, left: Details of the machining of the castings

Right, Fig. 6: Truing the chucking piece

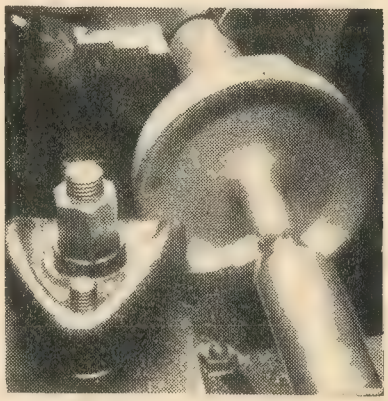

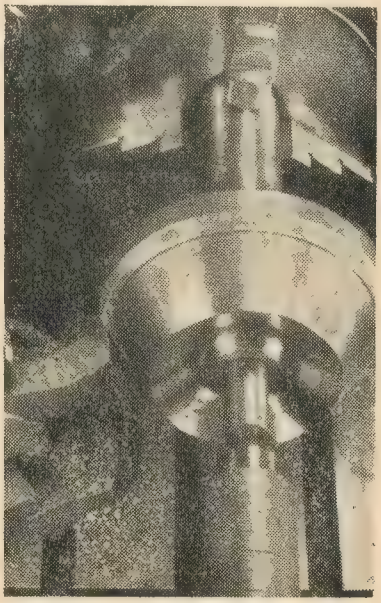

Fig. 7: Cutting the 60 deg. angle on the main casting

POSTBAG

The Editor welcomes letters for these columns, but they must be brief. Photographs are invited which illustrate points of interest raised by the writer

BRANCH LINE RAILWAYS

SIR,—I read with interest Vulcan's paragraph [Smoke Rings, November 28] concerning new battery-driven railcars. This, as many people will recall, was tried, many years ago in Ireland and I am wondering if readers can suggest what British Railways think it can gain by this method of propulsion.

Surely for light branch line service the most important consideration is to reduce weight. I presume the weight of the batteries would counterbalance any saving in this respect, compared with a conventional diesel or petrol unit. If weight and economy of operation are prime considerations I think that a more promising line of development would be a diesel engine driving direct through some form of gearbox, or torque converter, and a shaft with universal joints to one of the bogies, without the interposition of electrical apparatus.

It is hard to believe that in this day and age there can be any insuperable difficulty to coupling an engine in this manner. In that way, it may be noted, it should be possible to obtain the minimum unsprung weight which is highly desirable.

And what about the neglected petrol engine? Fuel costs may be high but it is lighter than the diesel and more flexible.

London W1. JOHN H. AHERN.

TESTING GLASS

SIR,—This is an attempt to answer Mr D. K. Pullan's query concerning the testing of glass for strain [October 31].

The practical details are simple. The piece of glass to be tested is placed between two crossed sheets of Polaroid and held up to the light, if there is no strain present the field will appear dark, if strain is present it will be visible as light or coloured patches.

The theory is more difficult and briefly is as follows. The Polaroid acts as a kind of filter allowing light waves vibrating in one direction only to pass through. Such light is said to be plane polarised. If two pieces of Polaroid are placed together with their planes of polarisation at 90 deg. (crossed), then no light will be transmitted through them.

Secondly, strained glass has the effect of rotating the angle of polarisation of light passing through it and, therefore, if placed between crossed Polaroids will, as it were, undo the effect of the first one and allow light to pass through the second one.

This, incidentally, is a well-known method of finding the stress in complex engineering structures. A model is made in transparent plastic and then loaded while between crossed Polaroids.

Polarised light may also be obtained by reflection from glass at an angle of incidence of 57 deg. Ordinary white light is quite suitable.

Books on the subject include *Amateur Telescope Making*, (Book 1) edited by Albert G. Ingalls; and *Modern Physical Laboratory Practice*, by Strong.

Finally, I would say to Mr Pullan that he need not worry very much about strain in glass for eyepieces. Polished plate glass ¼ in. thick is good and is also flat enough for one face of the lenses.

near Stourbridge, Worcs. B. MANNING.

HOSE ARMOURING

SIR,—Mr W. J. Hughes gives a method of armouring the hose for the Allchin traction engine [November 21].

Another method, using much less wire, space and time, is to slip rubber tube over a round rod, chuck in the lathe and pass wire through a small hole in a bar clamped under the tool holder. Set the lathe to screwcut about 12 to 16 t.p.i. in backgear, and watch the armouring do itself.

King's Lynn. A. BEAUMONT.

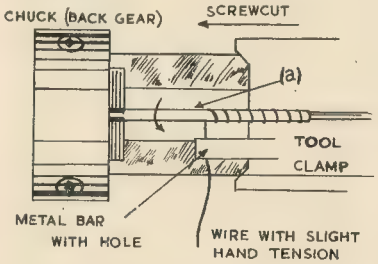

Mr Beaumont's suggestion for an easy way of armouring hosepipe

FIRST HE DROVE

SIR,—The photograph of *Lightning II*, Burrell showman's engine, in the October 10 issue revived for me some very pleasant memories as this engine was the first one I drove.

I started work on this engine in January 1919 at Rickmansworth as the engine was being used for timber hauling from Chalfont St Giles to Rickmansworth; previous to this she had been working at Cirencester.

I drove this engine for about four months, travelling with her from Rickmansworth to Knutsford in Cheshire. The owners at that time were Emerson and Hassard, of Whitehaven, Cumberland.

The last time I saw her was in 1922 at Hunslett Feast when she was back at her original job of generating electricity for a set of gallopers. Since then I have driven almost every type of road engine and no one regrets the passing of these engines more than I do.

Buntingford, Herts. E. WYATT.

"NORTH STAR" VALVE GEAR

SIR,—In his excellent review of the GWR Stars (Churchward edition) Mr Maskelyne in referring to the valve gear of *North Star* says:

"Its chief feature was that the lap and lead function of each valve was derived from the reciprocation of the main crosshead on the opposite side of the engine."

This is an error, probably due to a slip of the pen. The lap and lead motion of each valve was derived from the crosshead of the cylinder which it controlled; the *port opening* motion was derived from the crosshead of the other cylinder.

Lap and lead motion is always either in phase with the piston or 180 deg. out of phase with it, depending upon whether inside-admission or outside-admission valves are used.

The port opening function, equally, is always 90 deg. out of phase, either behind or ahead, again dependent on whether inside-admission or outside admission is in use.

The valve gears that perhaps illustrate this fact in the most obvious way are Walschaert's, and even more

directly, Bulleid's variation of Walschaert's.

In the foregoing remarks errors introduced by connecting rod angularity are disregarded.

In ME of 15 January 1901 is to be found a design for a valve gear for a model locomotive by the late Henry Greenly embodying the principle of the Stewart gear, but without the combination levers for lap and lead. In this gear Greenly overlooked an important point, namely that whichever way the engine ran the two valve rods would have to be at opposite ends of their curved links, one up and one down, but a simple alteration of the lifting gear would put this right.

Alternatively, of course, one cylinder might have a set of crossed ports, but while this is permissible for such things as feed pumps, it would be very bad practice for locomotive cylinders. This gear as it stands is most ingenious and the addition of combination levers and union links would be quite simple and would give valve events very closely resembling those given by a normal Walschaert's gear.

It always seemed curious to me that Churchward stuck to inside valve gear for his four-cylinder engines, it certainly makes for external neatness but very much at the expense of accessibility, not only of the valve motion but of the main inside motion as well. It also involves the use of two fairly big eccentrics in place of the more mechanically efficient return cranks.

Rustington, Sussex. K. N. HARRIS.

NO CONTROVERSY

SIR,—Vulcan [Smoke Rings, October 31] refers to the Bulleid Pacific as the most controversial class of locomotive ever to be put on rails in recent years.

Actually, of course, the controversy exists only in the pages of MODEL ENGINEER, and has been artificially stimulated by LBSC, who wishes, apparently, to bring ridicule upon Mr Bulleid.

Exeter, Devon. A. H. MATSON.

SYSTEMOSIS

SIR,—I was astonished to read [Smoke Rings November 7] that "Systemosis" has infiltrated into model engineering.

This insidious complaint is one of the symptoms of our modern civilisation together with the armchair footballer and the textbook technician. Model engineering provides among other things an escape from such afflictions.

The system of writing out two lists cross referenced and giving each item a number compels one to look at the index before anything can be located.

A system is, or should be, a means to an end and to my mind the only way is for everything to be "filed away" in alphabetical and/or numerical order. All my drawings, books, letters and bills are filed thus. There is *no* index; I don't need one. Moreover anything can be added to or taken out of the files instantly.

The tedium of indexing and cross referencing is usually a dull but comfortable little job for a full-time clerk and takes up far more time than it saves.

A horrible example of systemosis was prevalent at a large firm where I once worked.

If 8 BA bolts were to be called for on a drawing, the draughtsman would refer to a formidable volume of standard parts and would discover that 8 BA × $\frac{3}{8}$ in. bolts were defined as SP 88270/1a. This huge number would be put on the drawing.

In the shop the mechanic would scribble out a note to his foreman who in turn would write out a requisition and pass this on to the storeman who would then write this out in triplicate and then proceed to search for the material.

Usually, because of some defect in handwriting or eyesight of the persons involved the final number bore little resemblance to the one on the drawing. With the result that the mechanic who tried to obtain 8 BA bolts would most likely be issued with a box of Swiss files.

METHANIDES.

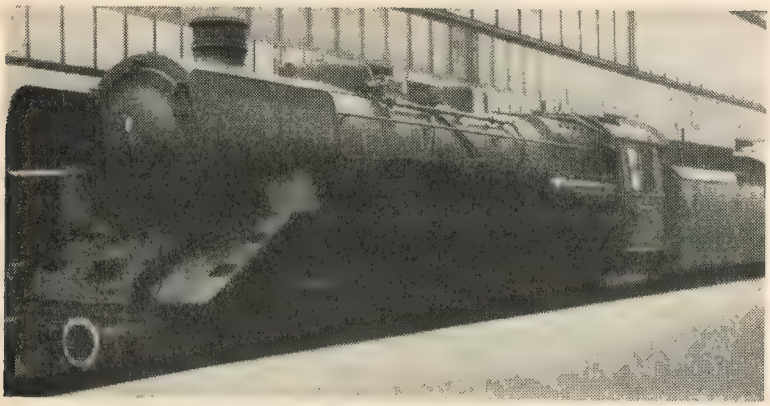

This photograph of a German 4-8-2 locomotive was taken by Mr L. S. King

GERMAN LOCO

SIR,—I am not able to give any details of the German locomotive in my picture other than to state that the photograph was taken in Stuttgart, but in these days of the passing of the steam locomotive, there is nostalgic interest in what will be a declining race.

Pinner, Middx. L. S. KING.

POWER HACKSAW

SIR,—Thanks to Mr Berkeley's recent letter I have been able to find a catalogue illustrating a saw very similar to mine as a Pacera, but mine appears to be rather an older model.

On the question of the strange markings on the sawn stock, if these are due to chatter why do not the marks extend right across the face? I do not remember stopping the saw during the cut, but if I did so do it could not be run at a different speed upon re-starting as it is driven by a constant speed induction motor.

St Leonards-on-Sea, Sussex. MARTIN CLEEVE.

EDWARD'S AIR PUMP

SIR,—May I comment on Mr K. N. Harris's suggestion [page 718, November 21] that the Edward air pump is not suitable for working with jet condensers.

I am sorry to see that such an old hand as Mr Harris has nodded on this point. There are, in fact, many Lancashire and Yorkshire textile mills driven by engines having jet condensers with Edward's air pumps. In the main, the vertical engines have the air pump driven from straight levers, as in marine practice, and the horizontal engines using this type of pump have them driven by bell crank levers from either the main cross-head or the tail slide. Both arrangements are in use.

In 1924 a second-hand Cole,

POSTBAG . . .

Marchent and Morley three-throw Edward's air pump, with jet condenser, was attached to a John Fowler compound horizontal engine in use at a brick works at Ambergate, in Derbyshire. I worked on this job myself as an erector for the former firm.

The Edward's air pump is just as suitable for working with jet condensers as any other kind of air pump even though it must deal with the injection cooling water as well as condensed steam. The swept volume of the pump naturally needs to be greater when working with a jet condenser than with a surface condenser for the same size engine.

Sheffield. ARNOLD THROP.

BOILER FIRST

SIR,—You will see by the photograph of my *Tich* that I have started in the middle, so to speak, and built the boiler, which I consider to be the most difficult component. In fact, I really did not believe in a coal fire 2 in. × 2½ in. until a few weeks ago.

Frankly I have been amazed at the flexibility and vast steam production obtained from this small unit, and feel that I want to thank MODEL ENGINEER for bringing out the design.

You may notice that I cheated by splitting one end of a 3 in. o.d. copper tube, which of course left the wrappers ¼ in. or so short. This I overcame by milling a super-deep foundation ring.

Littleover, Derby. A. J. SMITH.

MILNES LATHE

SIR,—I recently obtained a Milnes lathe in very good condition, but I am anxious to obtain more details and also the history of this particular model. I have written to Messrs Henry Milnes of Bradford but they no longer make this type of lathe and have no records of it.

I should be grateful if any owner of a similar lathe could give me information on: (1) how the worm drive of the fine feed is attached to the change wheel quadrant; (2) what operates the "knock-off" trigger; and (3) any ideas of the possible date of this model. There are no marks or numbers on the lathe.

If anyone has any old catalogues of Milnes lathes, I should like to obtain access to them.

Coulsdon, Surrey. W. H. WARDALL.

GREAT ORME RAILWAY

SIR,—Mr J. H. Durrance asks for further information on certain aspects of the Great Orme Railway [Postbag, 14 November 1957].

The cables are anchored to the cars under each bogie on Nos 6 and 7, the top section cars, and under the uphill bogie on Nos 4 and 5 of the lower section. Because of this cars must keep to their own track at loops. Nos 4 and 7 keep to the left, looking towards the summit.

The upper cable is continuous and passes round a pulley at the summit, but the lower cable comes up with the cars.

Points are of the "push over" type, which stay in the set position until a car trails through them on the other track. The upper section has a normal loop with two points, but the lower has only one point at the downhill end. From the upper end of the lower loop to halfway the track is gauntletted and no point is required.

Originally there were tracks connecting the upper and lower sections; the remains may still be seen. It appears, however, that the line has never been operated as a continuous run, and this would account for the winding station being halfway. I would welcome further information on this point, and also details of the fate of cars, 1, 2 and 3.

The trolley pole and overhead wire provide telephone communication between the cars and the winding station.

Birmingham 30. ALLAN PRATT.

BOILER TESTS

SIR,—I should like to reply to Mr W. F. Thain [page 716, November 21]. The Fowler ploughing engine No 13422, should have read Fowell and Co. Ltd, St Ives, Hunts.

Regarding Wirksworth Quarries Ltd, I was their roller driver.

They had three Robey tandems—I have had them all at different times. I think the one that was in the works in 1954 would be number VL 2773, not AL. After we had them for about three or four years they were converted to waveless three-roll rollers and they used to make a very good job, working at 250 lb. pressure with a Stayless round firebox. They still work at that pressure.

The boiler of the ploughing engine was fully examined by a reliable inspector before we had the test, and in no place was there a depression anywhere of more than ⅛ in. These were filled up by welding, also done by a qualified man.

The measurements of the boiler were taken when cold, off centre pops, and it was measured again when expanded. The expansions complied with Board of Trade regulations. We held the cold water test in the boiler for three minutes after measurements were taken and nowhere on the boiler was there a weep.

The 300 lb., stated, under steam was a misprint. It should have read 200 p.s.i. It is working at its nominal pressure of 180 lb. and has been since the test.

I am very pleased to think that I have not seen a burst boiler, but you could not compare the boiler that exploded at Linton, Cambs, in 1904, with the later type. The Linton boiler split at the throat plate, the weakest part. I have examined two photographs of it and notice it has no full

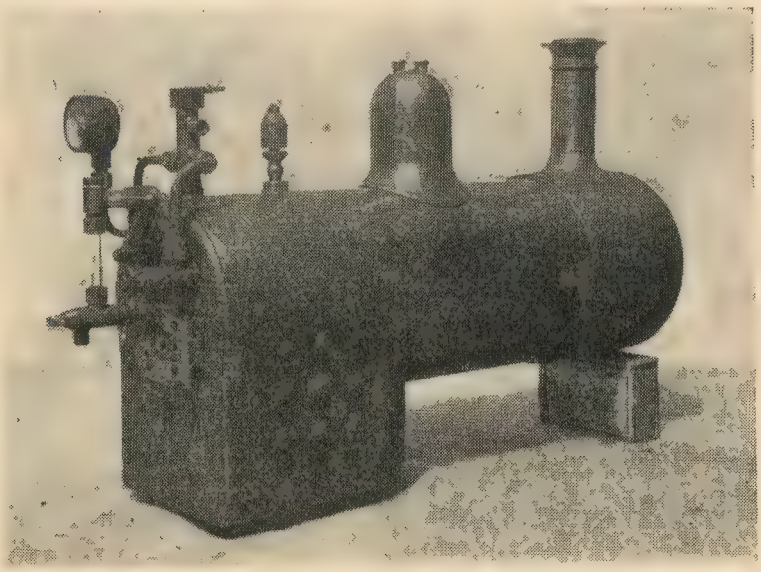

The boiler which Mr A. J. Smith has constructed for his TICH

length stay rods, nor screwed stay tubes. The photographs, by the way, are 10 in. × 8 in., and give plenty of detail. Perhaps the safety valves stuck up and caused the explosion.

I have been among steam tackle and boilers all my working life and have driven steam rollers, traction, tractors, steam carts and wagons of all makes and types, some good and a lot bad, in all parts of the country. If I had my time again I don't think I should wish for a better life. There's something about the old things that gets you and I still hope to do a little with them at rallies yet.

Welwyn, Herts. F. W. BARKER.

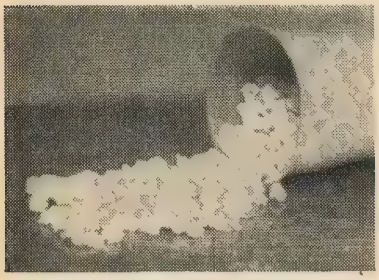

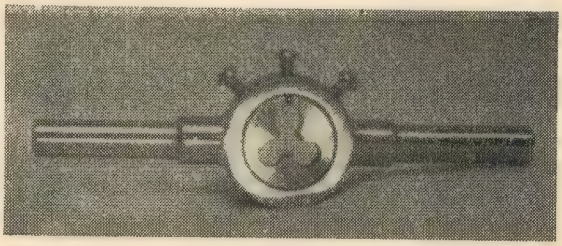

Left: A quantity of activated alumina, showing the kind of receptacle used. The die stock (right) and the micrometer stand were made by Mr R. Johnston from Duplex articles and drawings

RUST PREVENTION

SIR,—As co-instructor in an engineering training section, I have found that activated alumina very efficiently prevents rust when kept in exposed containers fairly near items to be preserved.

Activated alumina is used in the closed circuit of refrigerating plants for the purpose of drawing moisture from the cycle of events, and would appear to be active only in the initial starting of the refrigerator, the circuit remaining closed thereafter, no dampness being allowed to enter.

In appearance the material used is not unlike the old fashioned starch popular some years ago. Its action is simple, all moisture being absorbed at once, and for this reason, when not in use, it should be kept in an airtight tin.

Should the alumina become overburdened with moisture, it may be made serviceable again by warming at the fire.

The die stock and the micrometer stand were made from instructions supplied by Duplex, and in common with the other pieces, have been much admired.

Glasgow. R. JOHNSTON.

LOCAL LINES

SIR,—While it is agreed the steam locomotive is passing in favour of oil and perhaps later, electric traction, it does not appear that this alone can increase materially the patronage of rail travel purely on this account, i.e. "attractiveness to the public," as may be inferred from the article. [ME November 21.]

It is a fact that the open car type of trains put on and run on the Birmingham area and popularised as diesel trains did attract quite a large number of novelty trips, especially by children and their elders in the summer period of this year, it remains to be seen if this will continue in subsequent years.

What the serious traveller needs is a better service—more frequent trains and possibly lower fares, by this

means only will rail travel be sustained as a means of transport.

Incidentally, I am not so convinced that the "open car" type of vehicle is so comfortable for long distance travelling, especially at nights when the train has to be lighted: for the short distance, for one example, between Birmingham and Rugby this type of car may be suitable but I should hate to have to travel from say, London to Edinburgh in one of them, and I hope the comforts of the corridor type will not be abandoned for this class of travel, for some very obvious reasons—baggage space and sanitation.

Just one last point: can anyone say why the warning whistle of the diesel locomotives is so thin and anaemic? When these mute monsters rush through a station, the whistle is hardly audible until the thing is nearly past the platform. The steam locomotives had a dignified and clear whistle note; generally characteristic of the line they worked for.

Birmingham. W. WARE.

CHANGING CHUCKS

SIR,—A little job I always find very tedious is changing chuck jaws. It is astonishing how every fresh bit of work seems to require the jaws which are not in the chuck. The key always falls out in the process, and I bump my head on the cross-slide handle in picking up the key.

I have now made a set of chuck keys, from square section bar, which fit in the chuck of a carpenter's brace. With this device chuck jaws can be changed in no time at all, and no bruised foreheads either. I thought that your readers might be interested in this little dodge.

King's Lynn, Norfolk. R. NORTH.

ANY MODEL T FORDS?

SIR,—Considering the colossal numbers of model T Fords that were produced, is it not remarkable that so few examples of this famous vehicle have survived?

Having myself made an extensive search with the object of locating one I have now come to the conclusion that such a venture is well-nigh impossible.

Beccles, Suffolk. G. M. P. WIGG.

WHAT BOAT WAS SHE?

SIR,—My father-in-law, who is an old salt, has a saying, when he sees anything that is old or getting the worse for wear: "Have you had that since the *Lord Clive* went down?"

What kind of ship was the *Lord Clive* and when and where did she founder?

New Bradwell, Bucks. P. N. EOPAS.

READERS' QUERIES

Do not forget the query coupon on the last page of this issue

This free advice service is open to all readers. Queries must be on subjects within the scope of this journal. The replies published are extracts from fuller replies sent through the post: queries must not be sent with any other communications: valuations of models, or advice on selling, cannot be given: stamped addressed envelope and query coupon with each query. Mark envelope "Query," Model Engineer, 19-20 Noel Street, London, W1.

Radio control items

I am having difficulty in obtaining certain materials for a radio controlled cargo vessel which I am in process of constructing. I shall be grateful if you can help me by indicating to me where I might obtain the following items:

1 30-gauge cotton covered copper wire; *2* electro-magnetic coils suitable for operating low voltage relays (I do not want the relays complete as I wish to make them according to my own design); and *3* miniature electric motors suitable for rudder control.—K.B., Luddenden, near Halifax.

▲ 1 *Cotton covered copper wire can be obtained from London Electric Wire Co., and Smiths Ltd, 24 Queen Anne's Gate, Westminster, London SW1.*

2 *The Varley Magnet Co. Ltd, Pan Road, Barking, Essex specialise in the manufacture of electro magnetic coils for all purposes, but it is not known whether they are prepared to supply these in small quantities.*

3 *Miniature electric motors suitable for rudder control can be obtained from the Birchington Engineering Co., Albion Road, Birchington, Kent; International Model Aircraft, Morden Road, Merton, London SW19; and the Ever-Ready Co. (Great Britain) Ltd, Hercules Place, London N7.*

These can be obtained from most shops dealing with model supplies.

Coloured Perspex

Could you advise me where I could purchase some coloured glass or Perspex in small quantities? Also where could I purchase 100 ft of $\frac{1}{2}$ in. × $\frac{1}{16}$ in. black iron?—J.P., Rotherham, Yorks.

▲ *Coloured glass is obtainable from John M. Newton and Sons Ltd, 20 Greville Street, Hatton Garden, London EC1.*

Coloured Perspex is obtainable from Plastic Services Ltd, 16 Gloucester Road, Brighton, Sussex and from G. H. Bloor Ltd, 66 The Broadway, Mill Hill, London NW7.

Wrought iron is not much used at the present time and a definite source of supply is not known. Perhaps the most likely source would be a local blacksmith.

Pumps or injectors?

I am building a model of a Stirling 8 ft Single in $3\frac{1}{2}$ in. gauge. On the blueprint it shows two water pumps driven by eccentrics. As the prototype has not got mechanical pumps but only injectors, would it be a good thing to leave them out?—H.W., Sheffield 5.

▲ *Dispensing with axle-driven pumps is not recommended. Though injectors are fairly reliable nowadays, a well-made pump with bypass arrangement is 99 per cent efficient and has the big advantage that it can be set to keep the boiler at a constant level. An injector is inclined to be too "fierce" and may knock the pressure down too much.*

American "switcher"

An interesting picture of one of the 1897 Baldwin Camelbacks was published in a recent issue of MODEL ENGINEER. Are plans available? If not, have you drawings of American locomotives of the same period?—I.E., Salisbury, Wilts.

▲ *No drawings are available of any $3\frac{1}{2}$ in. gauge "switcher" (or shunting tank locomotive) of American type. The nearest would be* P. V. BAKER *which is an 0-6-0T with outside cylinders and Baker valve gear generally used in the USA. This, with modifications to the external appearance, would make quite a good US "switcher."*

Preparing a mould

I wish to cast some wheels for *Pixie*, but, being a beginner, I do not know what to use as a mould. (I propose to use brass for the castings.)

Could you, in addition, advise me on some colour scheme for *Pixie*, using Brunswick green?—E.A.O., Hereford.

▲ *The casting of model wheels, or, for that matter, any small parts, in brass or similar metal is a complicated and difficult process for the average modeller. Apart from the question of a suitable furnace, the preparation of the moulding sand calls for skill and experience. The essential ingredients of the sand are a fine-grained sand free from sea-shell with the addition of a trace of fuller's earth. This is then "tempered" with water. An oil sand usually consists of a fine silica sand, plus water, dextrin and linseed oil.*

Further information can be obtained from the Percival Marshall handbook "Foundrywork for the Amateur."

A suitable colour scheme, using Brunswick green, would be green for the boiler, firebox, cab sides and front, tender sides and back; black for the smokebox and chimney, footplate, frames, cab roof, tender inside and frames; black wheels; orange lining on the boiler bands and a panel on the cab sides and tender sides.

Fleischmann railway

I have recently obtained a Fleischmann model railway (HO gauge) and I am having extreme difficulty in tracing any dealer or tradesman stocking spares, rolling-stock, rails, etc.

I should be grateful, therefore, if you could supply any information on this type of model railway.—D.G.T., Middlesbrough, Yorks.

▲ *Fleischmann model railways are of American manufacture and, as far as can be ascertained, there is no agent for this company in the United Kingdom.*

However, the following firms may be able to help you:

1 *Messrs Gamages, High Holborn, London WC1.*

2 *Bradshaw Model Products, 40 Waterloo Street, Hove 2, Sussex.*

3 *Taylor and McKenna Ltd, 198 Craven Park Road, London NW10.*

King class drawing

Could you help me, please, on the following:

1 Is it possible to obtain a general arrangement drawing of a GWR King class 4-6-0 locomotive from British Railways? If so, to whom should I address my enquiry?

2 Where may I obtain needle bearings—Torrington or similar?—H.L.M., Plymouth.

▲ 1 *A general arrangement drawing of the GWR King class could*

probably be purchased from the Chief Mechanical and Electrical Engineer, British Railways (Western Region), Swindon.

2 Needle bearings may be obtained from the Torrington Company Ltd, Broadgate House, 7-10 Eldon Street, London EC2.

Building Newbury

I have gauge 1 *Newbury*—my first locomotive—well under way, but I would like to know why there is an 0.011 in. clearance between the crankpins and the holes in the coupling rods.

In conclusion, where can I obtain castings; I am interested mainly in the cylinders.—D.G.B., Wigton, Cumberland.

▲ *Some play must always be allowed between a coupling rod bearing and its crankpin, especially where the wheels are sprung, to allow for very slight errors in "quartering" and for inequalities in the track. In a full-size locomotive this play may be between 3/32 in. and ⅛ in.*

Connecting-rods, on the other hand, should be a close fit—just enough play to turn freely—as these are not subject to these considerations.

Cylinder castings for NEWBURY *can be obtained from Bond's o' Euston Road Ltd,* 357 *Euston Road, London NW*1. *Other castings from: Bond's, Messrs A. J. Reeves,* 416 *Moseley Road, Birmingham* 12, *and P. E. Thomas,* 123 *Lower Richmond Road, London SW*14.

Propeller for the "Duke"

I have a large ship's hull, 9 ft 6 in. × 19½ in. beam × 9 in. draft. With a scale of ⅜ in. to 1 ft she is making up as the old *Duke of Lancaster* which sailed from Heysham Harbour, Lancs. The plans of the "Duke" show twin screws of 6 ft dia. The model hull has only one screw; can you tell me what size this should be to give good results? I have a screw of 5 in. dia. equivalent to 13 ft 4 in. on ⅜ in. scale. The drive will be an ex-RAF geared motor of 12 v. at 3.5 amp. and I think the final drive revs will be about 1,000.—E.W.S., Arnside, Westmorland.

▲ *If the 5 in. dia propeller will fit the model it would be worth trying. So much depends on the power of the motor and the form of the hull that it is impossible to specify the most suitable dimensions for the prop. The diameter is usually a matter of convenience and the pitch is determined by trial and error. If for any reason the propeller is unsuitable, one could be fabricated by brazing sheet metal blades—which would have to be at least ⅛ in. thick for a model of this size—into a solid hub which has had slots cut to receive them. The blades should be set at an angle of about 45 deg. and on trial they should be twisted to give more or less pitch until the best results are obtained. The single screw would be preferable for the model as it is often difficult to get good steering with twin screws.*

Injector trouble

I have finished a 3½ in. gauge *Hielan' Lassie* and she can pull quite a load, but I am having injector trouble. I just don't seem to be able to get it to work. The injector picks up immediately and feeds water into the boiler when the boiler pressure is 60 p.s.i. but as soon as the boiler pressure goes up to 80 p.s.i. the water streams out of the overflow.—N.L., Morden, Surrey.

▲ *There are three possible causes of the trouble:*

1 The cones may not all be exactly in line.

2 The two combining nozzles may not be exactly concentric.

3 The delivery cone may be slightly too near to the combining cones.

It is suggested that the effect of slightly shortening the steam nozzle in the combining cones should be tried as this would enable the steam to be better condensed.

Maintaining pressure

Thirty years ago I built a 2½ in. gauge locomotive *Simple Sally* to LBSC instructions in the MODEL ENGINEER, but did not quite finish the tender. At the many requests of my grandchildren, I have now completed the engine and tender and have had it under steam. Unfortunately, I do not seem to be able to maintain steam pressure. I start off with a pressure of 60/70 p.s.i., at the end of a 60 ft run of track the pressure drops to 30 lb. I then have to use the blower to raise the steam to 60 lb. for the return journey. I am not able to maintain the steam pressure for continuous runs. The fire does not seem to be able to make it quickly enough and as far as I can tell there are no steam leaks. Can you offer any suggestions as to the cause?—H.P., Sutton Coldfield.

▲ *The most likely causes of the shortage of steam mentioned are:*

1 Wrong fuel—anthracite or Welsh steam coal should be used.

2 Blast nozzle too large or not central under chimney, or too near to or too far away from petticoat pipe.

3 An air-leak in the smokebox. The smokebox and door must be quite airtight.

4 Valve gear not correctly set, perhaps cutting off too late in stroke.

5 Valves not seating truly on port-face.

6 Not enough air going through furnace. (Firebars need at least ⅛ in. gap).

7 Proper ashpan not fitted or not closed at front and sides, causing grate to cool off.

8 Timing of valves in relation to pistons wrong.

Model for beginner

I have access to a 3½ in. lathe and most hand tools but I am a beginner at model engineering. I should appreciate advice on a suitable model that I could build.—R.F., Dunedin New Zealand.

▲ *Most of the* MODEL ENGINEER *plans are relatively straightforward to build but a great deal will depend on just what type of model attracts you most. If you prefer steam engines, the simplest types for which plans are available are the Theseus and Perseus mill engines and also the basic marine plant. Internal combustion engines all call for a higher degree of accuracy than steam engines, but the single-cylinder two-stroke engines of any type can be relied upon to give good results provided that the machining of the cylinder and piston, in particular, is carefully carried out.*

Brazing a boiler

Please give me some information on brazing a copper boiler for the 3½ in. gauge *Ivy Hall*. It is my first locomotive and I do not wish to make a time bomb by using the wrong material.—K.O., Sheffield.

▲ *The speltor which is recommended for boilers such as that for* IVY HALL *is either Sifbronze or Cuprotectic, both of which are obtainable from any good dealer or ironmonger. Some of the smaller details like bushes on the boiler can be brazed with ordinary brass wire. It is strongly recommended that you follow exactly the instructions published for the construction of* IVY HALL, *and you will not go far wrong.*

Water-lifter

Could you please give me an explanation of the water-lifter as fitted to traction engines?—J.S., Port Talbot, South Wales.

▲ *The term water-lifter as used for traction engines is really another name for an injector and it works in exactly the same way.*

CLUB NEWS

EDITED BY THE CLUBMAN

UNHAMPERED by the difficulties which followed the Suez crisis a year ago, the modellers of Britain are already well into 1958 with their plans for things-to-come. It is now possible to look well beyond the big exhibition to be held at Cambridge in March with entries from the whole of East Anglia and from areas reaching to North London, Luton, Bedford, Peterborough and Spalding.

In May, for instance, **Birmingham SME** is holding a show at Bingley Hall, Birmingham, where there is plenty of room—so much, indeed, that the society wants all the exhibits it can get from members.

When an exhibition has to be organised, five months is not a long time. Exhibition secretary D. W. Purves (28 Lickey Square, Rednal, Birmingham) and manager W. Finch are already asking for the return of entry forms. They hope that members will make the best use of the winter by finishing their new models in time for May.

This also applies to the ladies. They are not asked to produce a *Virginia* or anything like that. In fact, they can probably contribute without going anywhere near a lathe and by sticking happily to the familiar sewing machine. The handicrafts section should be as rich in fine craftsmanship as the rest of the show.

Among the other events ahead are the annual dinner on February 26, the annual meeting on March 26 and the Picknall and Leyman Cup Competition on April 16.

ANYTHING CAN HAPPEN

For **Hull SME** the 1958 programme opens on January 2 with a Surprise Night. There's a film on January 16, a metallurgy open night (which sounds rather odd) on January 30, and another film on February 15. A visit to the Miniature Railway Society is proposed for February 27, and on March 13 the members will learn about a milling machine.

By the time of the annual meeting on March 27 the secretary should have a full and interesting year to report.

AFTER HOGMANAY

While preparing for the Schoolboy's and Schoolgirl's Exhibition at the Kelvin Hall, members of **Glasgow SME** have plenty to engage their interest. They are holding an auction sale on January 11, by which time everyone in Glasgow should be well over Hogmanay. Early in the following month, February 8, there will be another special occasion—Power Boat Night, with a speaker to be arranged. "Altering Slide to Piston Valves" is the title of a talk by E. A. Keay on March 8.

That mysterious White Steam Car crops up again on April 12 and 13. Earlier, on April 6, the club has a Pond Day, when the ship men, given good weather, should be able to enjoy themselves. Track Day is a little nearer to summer—on May 30.

ME DIARY

December 20 Malden SME, "Model Loco Building: Choice and Cost."
Birmingham Ship Model Society, "Ship lines and Plans for Modellers," A. E. Field.
Warrington MES, Christmas gathering, Royal Oak, Bridge Street, Warrington.
Rochdale SMEE general meeting, Lea Hall, Smith Street, Rochdale, 7.30 p.m.
December 21 Railway Enthusiasts' Club, "Railways on Records"; railway music, songs and sounds.
January 2 Hull SME, Surprise Night.
January 3 Rochdale SMEE annual meeting, Lea Hall, 7.30 p.m.
Warrington MES, progress report on American Atlantic, 5 in. gauge.
January 9 Huddersfield SME, Lord Ganoch on "Railway Matters," 7.30 p.m.
January 11 Glasgow SME, auction sale.
January 13 Institution of Engineering Designers, "Shielded Arc Welding," W. A. Woolcott, Northern Architectural Association Hall, Newcastle upon Tyne, 7.15 p.m.
January 15 Birmingham SME, talks by members; bits and pieces, White Horse.
January 16 Hull SME, film strip.

CABOT'S BRISTOL

On 2 May 1497, 460 years ago, John Cabot sailed from Bristol with his sons and a crew of eighteen on a voyage of discovery.

Recently, Cabot's Bristol came alive at the Ships in Miniature Exhibition of **Bristol Ship Model Club**—in a panorama of Broad Quay as it was in the fifteenth century. With this, visitors saw a representation of the docks as they are today.

In the picture president E. L. Lowther is showing part of the present-day panorama to Mr and Mrs John Hill, of Charles Hill and Sons, the Bristol Steampship Company. Chairman N. Poole is on the right.

You can also see in the picture the club's Severn Trow model and part of a working model of HMS *Hood*. Other exhibits included a Clyde passenger steamer, an H Class submarine, numerous miniatures, a convoy battle, and paintings by club artists.

Edward Bowness, arriving to give a talk, was much taken with the exhibits. Not surprisingly, new members were recruited. If you would like to join them, or if you are otherwise interested in this excellent club there is a warm West Country welcome awaiting you at any of the monthly meetings. They are held on the second Tuesday in each month at the Sailor's Home in Queen Square, Bristol. The time is seven o'clock.

[Bristol Evening Post]

Model Engineer

Classified Advertisements together with remittance should be sent to Model Engineer, 19/20, Noel Street, London, W.1, by latest Thursday morning prior to date of publication. Advertisements will be accepted from recognised sources by telephone. GERRARD 8811. Ex. 27

CLASSIFIED ADVERTISEMENTS

★ Private: 3d. per word. Trade: 6d. per word. Minimum 12 words. Use of box 1s. 0d. extra.

★ Rates for displayed advertising in this section. Trade 35s., Staff 45s., per single column inch. (Column width $1\frac{7}{8}$ in.)

The Advertisement Manager reserves the right to refuse or suspend advertisements without giving any reason. Every care is taken to avoid mistakes, but the publishers cannot be held liable in any way for printing errors or omissions. Receipt of "copy" for publication implies acceptance of these conditions by the advertiser. Whilst every care is taken to exclude advertisements from doubtful sources, no responsibility can be accepted by the publishers for the bona fides of advertisers.

WORKSHOP EQUIPMENT

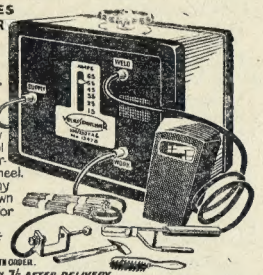

"POP" RIVET GUNS
(Lazy Tongs)

For motor body, sheet metal and fabrication work. With universal collet to take all sizes of rivets. **£4.11.0.**

"POP" RIVETS

$\frac{1}{8}$", 5/32" and $\frac{3}{16}$", **10/-** per 250, **20/-** per 1,000 of one and the same size. Mixed "Pop" Rivets **13/-** per 500, **19/-** per 1,000. Send stamp for leaflet.

NEST OF DRAWERS

Overall size 7" wide × 5" deep × 11" high. 12 drawers, each measuring 3" wide × $4\frac{1}{2}$" deep × $1\frac{1}{2}$" high. Useful storage for the engineer, motorist and householder for nuts, bolts and small components. Green enamelled. **£1.** P. & P. 3/-

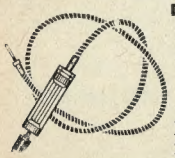

FLEXIBLE DRIVES

4' 6" long with $\frac{1}{4}$" drill chuck. For drilling, polishing and light grinding. Runs in both directions. Can be used with Wolf and other hand drills. **45/-** post paid.

HARMSWORTH, TOWNLEY & CO.
Watt House, Jordan Street
MANCHESTER 15

CHARLES PORTASS & SON
Buttermere Works, Sheffield 8

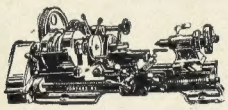

Lathes Chucks Counter-
Motors Tools Shaft

Buck & Ryan for Lathes and Workshop Accessories, drilling machines, grinders, electric tools, surface plates, etc.—310-312, Euston Road, London, N.W.1. Phone: Euston 4661.

Immediate Delivery from Stock, Myford "ML7" and "Super 7" lathes, Super Adept lathes, bench planers, shapers, electric motors, small tools.—F. W. KUBACH, 12, Sylvan Road, London, S.E.19. LIV 3311-12.

Mail Order. World sales. New bargains. 1s. extra post under £1. Precision drill chucks, $\frac{1}{2}$" No. 1 M.T., 43s. No. 2, 44s. Drill chucks, $\frac{1}{2}$" No. 1 M.T., 11s. 6d. No. 2 M.T., 11s. 6d. Dies, $\frac{13}{16}$", 40 t.p.i., 5/32", $\frac{3}{16}$", 7/32", $\frac{1}{4}$", 3s. 4d. each. 1" dia. $\frac{5}{16}$", 40, 11s. 11d., $\frac{3}{8}$", 40, 11s. 11d. Taps, 40 t.p.i., 5/32", $\frac{3}{16}$", 7/32", $\frac{1}{4}$", 2s. each. Hand drill, $\frac{1}{4}$", 10s., $\frac{5}{16}$", 16s. Breast $\frac{1}{2}$", 2-speeds, 27s. 6d. Micrometers, 1", 10s. 2", 14s. 6d. Machine vices, 18s. 6d. Lathe centres, No. 1 M.T., 4s. 7d. No. 2, 6s. 6d. Burnerd independent chucks, 4", 72s. $4\frac{1}{2}$", 75s. 6", £6 4s. 6d. Sets H.S. drills, No. 1-60, 50s. H.S. $\frac{1}{16}$"-$\frac{1}{2}$", 29 different, 66s. H.S. A-Z, 54s. Stands each set. Hardened drill gauge $\frac{1}{16}$"-$\frac{1}{2}$", 20s. Fobco drilling machine, $\frac{1}{2}$" chuck, volts electric, 220/240, £40 18s. H.S. centre drills, size 1, 2s. 2, 2s. 3d. 3, 2s. 9d. 4, 3s. H.S. small milling cutters, 6 different, 10s. Taps B.A. 0-1, 1s. 5d. 2-3-4-5, 1s, 4d. 6, 1s. 5d. 7-8, 1s. 8d. 9-10, 2s. Dies $\frac{13}{16}$" B.A., 0-1-2-3-4-5-6, 2s. 8d. each. 7-8, 3s. 4d. 9-10, 4s. Carpenter's ratchet brace, 14s. Table vice $2\frac{1}{2}$" jaw, 13s. 6d. Tenon saws, 8", 6s. 4d. 10", 7s. 12", 7s. 6d. Carpenter's saws, 22", 10s. 6d. 24", 11s. Spring dividers, 5", 7s. 6d. Spring outside callipers, 6", 7s. 6d.—S. GRIMSHAW, 7, Hall Street, Gorton, Manchester, 18.

"E.W." $2\frac{1}{2}$" × 10" Convertible Lathe. We can now arrange delivery of this much sought-after lathe. All accessories from stock. S.A.E. lists and illustrated leaflet.—WANSTEAD SUPPLY CO., 39, The Broadway Woodford Green, Essex.

Harrison Lathe, 6" geared head, s.c.s.s., £125. Foster capstan lathe, 2" through spindle, all geared head, £85. Oldfield lathe, $7\frac{1}{2}$", all geared head, £325.—42B, Johnson Road, Bromley, Kent. RAV 7413.

Burnerd 6" self centre lath chuck with key and spare jaws, absolutely brand new and unused, £10.—Box No. 8643, MODEL ENGINEER Offices.

Grayson $3\frac{1}{2}$" B.G.S.C. lathe, chucks, $\frac{1}{4}$ h.p. motor, countershaft, new condition, £40 o.n.o. Write—PARKE, 76, Vegal Crescent, Englefield Green, Surrey.

Amco 7" stroke shaping machine, swivel vice, motorised, £37 10s.—CHAPPELL, 586, Lea Bridge Road, Leyton, E.10. LEY 3500.

E.W. $2\frac{1}{2}$" × 10" B.G.S.C. Lathe, three chucks, two 4-way toolposts, boring table, vertical slide, indexed leadscrew, handwheel and many other parts, £25. All offers considered.—CRAIG, 32, Wentworth Ave., Salford, 6.

Milling Machine, heavy bench type, three step pulley, $\frac{5}{8}$" spindle with ball race thrust, $1\frac{1}{2}$" overarm support, table 15" × $4\frac{1}{2}$" lever feed and hand wheel, matched pulley on countershaft, £15. Motor if required, 2 v., belt drive, extra.—Below.

EX. GOVT. BARGAINS
TRIPODS. Unused. 38" long, weigh only 5 lb. Immensely strong. Carrying sling. Brass cap easily adaptable for cameras, telescopes, etc. Really rigid job. Each 12/6d. post 2/6d.
Send 3d. stamps for illus. list of Motors, Transformers, Rectifiers, Switches, etc.
MILLIGAN'S, 24, Harford Street, Liverpool 3
Money Back Guarantee

Small Precision Machine Vice, suitable lathe, shaper, miller, etc., complete kit of parts with detailed drawing, 5s. 9d. per set, post and packing 2s. 3d.—Below.

Malleable Iron Face Plates, 7" dia., $\frac{3}{4}$" wide, ribbed for strength, capable of being bored to $1\frac{1}{8}$". Easy to machine, suitable for spare for special set-ups, 3s. each. Post and packing, 2s. 3d.—LLOYD, Moor Road, Brinsley, Notts.

Pultra. 50 mm. or 90 mm. instrument lathe, collets, step chucks, 3-jaw compound, many extras. Single-phase countershaft unit, £30.—BRADLEY, 15, Grange Road, Wigston Fields, Leicester.

ML7, motorised, 3- and 4-jaw chucks, etc., mint condition, £65.—F. C. HEBDITCH, 3, Littlejohn Road, St. Mary Cray, Kent.

Wandess 1A boring bar complete with maker's tools and motor cycle cylinder boring table, all as new, only done 20 bore, £95.—LACK, 14, Carter Knowle Road, Sheffield, 7.

Myford ML7 vertical slides, swivelling, £4 each. Vices for same, 15s. each. Vertical slides, £2 10s. each, all new. 6" Master Colchester lathe with chucks, etc., £65.—E. DAWSON, 89A, Regents Park Road, Chalk Farm, London, N.W.1. PRI 2935.

MODELS AND FITTINGS

Steam Plant, h.p. 150, vertical compound, reversing engine, $1\frac{3}{4}$" × $1\frac{3}{4}$" × $1\frac{1}{4}$" stroke. All fittings, pump, water tank, etc. Photograph, s.a.e. please. Cheap, £30.—Box No. 8736, MODEL ENGINEER Offices.

$7\frac{1}{4}$" Gauge Princess Royal locomotive and tender, a very fine example of detailed engineering skill by the late Mr George. Superficial work only required to complete. The all copper boiler has been tested under steam pressure, £450 or near offer—Phone Hayes 0410 between 6.30 and 9 p.m.

For Sale. Twin Trix railway, about £400. Full particulars on application, far too much to put in adv. To be sold owing to death.—Box No. 8741, MODEL ENGINEER Offices.

CATALOGUES

Tool & Materials ... ... 9d.
L.B.S.C. Blueprint & Castings ... 1/-
Refunded on first 20/- order.

HANDRAIL KNOBS

"O" Gauge ... ... 2/9 doz.
1 in. " ... ... 3/- "
2½ in. " ... ... 3/3 "
3½ in. " ... ... 3/9 "
5 in. " ... ... 4/3 "

Overseas orders a speciality.

KENNION BROS. LTD.,
2, Railway Place, Hertford. Phone 2573

Wanted. All types British naval intelligence ship ident. models in hardwood, scale 1"-100', any navy or merchant marine. German Viking metal models, scale 1 : 1,250 single pieces or collections. The following editions only: Jane's "All the World's Fighting Ships," 1898; Jane's "All the World's Aircraft," 1909 or 1918; Weyer's "Taschenbuch der Kreigsflotten," 1922; Shizuo Fukui's "Japanese Naval Vessels at the End of the War," publ. 1947. Write and describe. For sale or trade, duplicate models, 1"-100' or 1 : 1,250 scales, all types. —DON SCHROTH, 321, N. Monroe, Hinsdale, Illinois, U.S.A.

For Sale. One 3-ton Wallis & Stevens Simplicity steam roller, in good working condition. Suitable for steam enthusiast as hobby.—J. CHAPLOW & SONS LTD., Kendal.

Wanted. "O" Gauge 12 v., d.c. locomotive or rolling stock. Exchange ½ h.p. electric 230 v. motor as new.—Box No. 8749, MODEL ENGINEER Offices.

Sale. ¾" Scale Burrell traction engine, spirit fired, good order, £12.—CAIRNS, 32, Denton Street, Barnoldswick, Colne, Lancs.

For Sale. 60' ¾" scale flat base bronze rail, £2. Wanted. 1½" scale coal-fired passenger-hauling traction engine. Copper boiler, low price.—13, Brampton Road, St. Albans.

Best Offer over £10. Twin running Trix layout including two transformers and controllers, two ovals, four points, two buffer stops, two complete trains and many accessories.—D. F. WINTER, The Knoll, 69, Waxwell Lane, Pinner, Middx.

Wanted. 2½" Gauge locomotive, tanker preferred. Will do minor repairs if price reasonable. Or will exchange Stuart 2½" bore vertical 14½" × 8" × 8".—23, Broad "Oth" Lane, Bolton, Lancs.

"Bat" 4-4-0 tender locomotive in gauge "O," blueprints, 7s., wheel castings, 13s. 5d., cylinder castings, 12s. 1d., pump castings, 4s. 2d. List 6d.—LUKEN'S, 10, Coldbath Road, Birmingham, 14.

ELECTRICAL

A.C. Motors Self Start, induction 200/250 volts, 50 cycles, 1 phase, 1,425 r.p.m., ¼ h.p., £4 2s. 6d., 1/3 h.p., £4 19s. 6d., ½ h.p., £6 15s. Perfect and guaranteed. Carriage extra.—JOHNSON ENGINEERING COMPANY, 319, Kennington Road, S.E.11. Reliance 1412/3.

New Geared Motors, universal, 230 v., 22s. 6d. Also silent fan motors, 230 v., a.c., 15s. C.F.—WHEELHOUSE, 13, Bell Road, Hounslow. HOU 3501.

SITUATIONS

Toolroom Turner willing to undertake evening work at home on own 9" swing South Bend precision lathe. Your castings machined, or parts made to pattern or drawing. Orders accepted through post, and work despatched C.O.D.—REID, 30, Forster Road, Southampton.

GENERAL

Air Compressors, tanks and accessories at far below list, from £5 17s. 6d., TV and lighting generator from £15.—TEDDINGTON ENGINEERING CO. LTD., 29-31, Hight Street, Teddington, Middx. Tel.: Kingston 1193.

Learn It As You Do It—We provide practical equipment combined with instruction in radio, television, electricity, mechanics, chemistry, photography, etc. Write for full details to—E.M.I. INSTITUTES, Dept. ME47, London, W.4.

Spraying Handbook, 3s. 10d., post free. Paints, cellulose and allied spraying sundries. Catalogue, 3d.—LEONARD BROOKS, 25, Oak Road, Harold Wood, Romford.

Build Your Own Refrigerator. Everything to make built-in or cabinet refrigerator. S.A.E. for sealed unit list and schematic diagram or 1s. (refundable) for 32 page catalogue including details of free 4 cu. ft. cabinet diagram offer. Hire purchase available.—WHEELHOUSE, 13, Bell Road, Hounslow. 'Phone: HOU 3501.

For Guaranteed Watch Repairs, also all replacement parts, try—YOUNG & SON, 133, London Road, Chippenham, Wilts.

Guaranteed ! Easy Home Constructed Refrigeration. Genuine domestic components. Not secondhand ice cream scrap. Modern hermetic G.E.C. units, gas, electric and oil silent unit. Everything for refrigeration. Complete specialists.—Send s.a.e. for free illustrated "Sealed system" leaflet or 1s. for complete catalogue (refunded with first order).—BRAID BROS., 50, Birchwood Avenue, Hackbridge, Surrey. Phone: Wallington 9309.

Aqualung and compressor equipment.—PRYCE, 157, Malden Road, Cheam.

Warship Drawings. Lines and full detail. Send for sample from—NORMAN A. OUGH, 98, Charing Cross Road, London, W.C.2. Temple Bar 3926.

Build Your Own Car Heater. Complete set of new components, £3, carr., 3s. 6d. Radiators, 12s., post 2s. 6d. S.A.E. for list. —WHEELHOUSE, 13, Bell Road, Hounslow. HOU 3501.

Wanted. Records of Churchill's wartime speeches, good condition. Write—SUNTER, 1440, 9th Avenue, East Calgary, Alberta, Canada.

Compressors for Sale. Twin piston with tank, 2½ cu. ft. per min., £4. Single cyl., £2. All types motors. S.A.E. for list. —WHEELHOUSE, 13, Bell Road, Hounslow. Phone: HOU 3501.

Light Precision Turning, Fitting and Assembly Work Wanted. Production, experimental or prototype and complete mechanisms. Prompt delivery, moderate charges.—CANONBURY ENGINEERING CO., 283, Essex Road, London, N.1. Can 6256.

Wrought Iron Work. Flat material ia 12' lengths. ½" × ⅛", 2d. per ft.; ½" × ¼", 3d.; ½" × ⅜", 3½d.; ½" × ¾", 4d.; ⅝" × 1", 5d.; 5/16" × ¼", 4d.; 5/16" × ¾", 5d.; 5/16" × 1", 6d. Plus 20 per cent. for cut lengths. Also rounds and squares. S.A.E. for list.—B. J. HARRIS, The Cottage, Corngreaves Hall, Cradley Heath, Staffs.

Watch, Clock and Instrument tweezers, pliers, eyeglasses, broaches, pivot-steel files, screwdrivers, brushes, oil lathes, cleaning machines, staking and jewelling outfits, rolling mills, rouge, etc. Illustrated catalogue and price list, 5s. 6d. Easy payment terms available.—JOHN MORRIS (CLERKENWELL) LTD., 64, Clerkenwell Road, E.C.1.

Unowot Whiston's Sell. S.A.E. catalogue.—K. R. WHISTON (DEPT. M.E.S.), New Mills, Stockport.

Wanted. "M.E." bound volumes 107 to 112.—PARK, 3608-31, Street, S.W., Calgary, Canada.

Photo Enlarger castings and bellows, for 35 mm., 2¼" × 2¼", 2¼" × 3¼", 35s. per set. S.A.E. for details.—V. J. COTTLE, 84A, Chaplin Road, Easton, Bristol, 5.

"Showmen's Engines and Dimensions" Part two, illustrated, ready Xmas, 3s. Part one, 2s. 9d.—B. MURDOCK, 74, Blackborne Road, Dagenham, Essex.

Model Engineers for sale, 1949 to October 1957, £5, five missing.—51, Grove Road West, Enfield Wash, Middx.

For Sale. The Fowler showman's road locomotive "Goliath," completely renovated. All enquiries.—3, Linford Street, Belgrave, Leicester.

Sale. Model Engineer, vols. 100-106 complete (unbound), perfect condition. Offers to—Box No. 8748, MODEL ENGINEER Offices.

Wanted. Model Engineer, vols. 75, 76, 77, bound or unbound.—BETTS, 54, Lorraine Road, Timperley, Cheshire.

Model Engineer, September 1951 to date, all as new, offers.—DAVIS, 42, Mardale Road, Worthing, Sussex.

Wanted. 5-pt. brazing blowlamp, ex-W.D. type, preferred.—BLACK, Northmoor, Oxford.

M.E.s professionally bound, gold letters, 11s. vol. including return postage.—TEBBUTT 46, Winstanley Drive, Leicester.

A Mine of Information. Model Engineers 1950 to 1957, unbound. Best offer, will sell separately.—72, Newfield Lane, Hemel Hempstead.

Model Engineer

SUBSCRIPTION FORM

Overseas readers may experience difficulty in obtaining Model Engineer. To become an annual subscriber send an International Money Order for 65s. sterling ($9.25 in U.S.A. and Canada) with the completed form below.

Please send a copy of Model Engineer each week to:

Name.....
(Block letters please)

Address.....

.....

I enclose *valued* 65s. ($9.25) *to cover subscription for one year* (52 *issues*). *This includes postage.*

Post this form to

MODEL ENGINEER · 19-20 NOEL ST · LONDON W1

Printed in Great Britain for the Proprietors by ELECTRICAL PRESS LTD., Cordwallis Works, Maidenhead, Berks, and published by PERCIVAL MARSHALL & CO. LTD., 19-20, Noel Street, London, W.1.
Registered for transmission by Magazine Post to Canada including Newfoundland.

M.E. QUERY COUPON DECEMBER 1957

NEW REVISED EDITION
NEW LOWER PRICE

RADIO CONTROL OF MODEL AIRCRAFT

by G. Sommerhoff

THE present edition, which is the third, has been revised and new material added. The use of transistors to replace radio valves has been considered in detail so far as R/C circuits are concerned. Exactly what a transistor is and its function compared with a valve is explained, and the author describes the uses (and limitations) of this new component in radio equipment.

In this new edition the groundwork is basically the same. Early chapters lead the reader through the functions of the various components and explain in non-technical language the basic essentials of radio with particular emphasis on R/C equipment. Subsequent chapters deal with the theory and construction of transmitters and receivers, including transistorised receivers. There are also notes on commercial receivers and on trimming and adjusting. Circuits for simple control systems are then described, and the author goes on to explain his own methods of control which were developed after a long period of practical work and experiments. Final chapters deal with the installation of equipment in the aircraft, trouble-shooting, airframe design, cockpit drill and flying.

This book is considered to be a standard work on radio control and the revisions bring it right up-to-date. As before there are numerous drawings and diagrams to amplify the text.

7s. 6d. Post 6d. (U.S.A. and Canada $2.00).

From your bookseller or direct from us

M.E.

ORDER TODAY

To Percival Marshall & Co. Ltd.,
19-20 Noel Street, London, W.1

Please send by return "Radio Control of Model Aircraft." I enclose remittance of 8s. to cover postage and packing. (U.S.A. and Canada $2.00.)

NAME (Mr., Mrs., Miss).....
(Block letters please)

ADDRESS.....

.....
(Overseas customers can use an International Postal Order.)

"WILWAU CASTINGS"

(used and approved by L.B.S.C.)

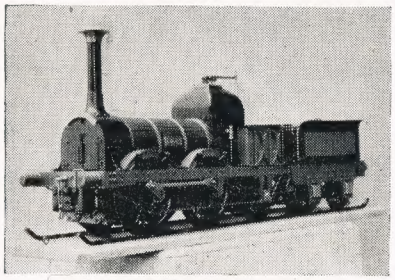

"Titfield Thunderbolt" 5" G.

Mr. Tom Horne, Hawick, writes:—
"your castings machined up perfectly, etc., etc., Curly's drawings worked out almost perfectly in every detail—don't know how he does it!".

Agent for "WILWAU" Castings in U.S.A., Avery L. McCune, 11 Everett Place, Maplewood, N.J.

Please send S.A.E. for list of any L.B.S.C. loco in which you are interested.

W. K. Waugh
31 Hillfoot Drive, Bearsden, Nr. Glasgow
Tel: BEA 2985 MIL 1342

* Permanent Magnets in action *

Removing swarf from a drilled hole . . .

just another of the countless workshop uses for "Eclipse" Magnets. A piece of mild steel on one pole of a powerful magnet is all you need. See other action pictures of "Eclipse" Magnets in "Small Magnets are so Versatile!", a new booklet available from your usual tool dealer.

Eclipse PERMANENT MAGNETS

Made by James Neill & Company (Sheffield) Limited
and obtainable from all tool distributors

PM41

THE IDEAL CHRISTMAS PRESENT . . .

A Garner Gift TOKEN

WHAT IS A GIFT TOKEN?

Our Gift Token takes the form of a tasteful Greetings Card carrying a voucher to the value of your gift from 10/- upwards. The lucky recipient can, at his leisure, use this for the purchase of tools or materials to his own choice from our vast stocks. It cannot fail to please.

WHAT MUST I DO?

Simply send us remittance to the value of the Token required. Where required we will gladly post direct and enclose your message. Post free in U.K. or Air Mail 1/6 extra.

Obtainable Only From:

T. GARNER & SON LIMITED *Hand & Machine Tool Division*
6-8, Primrose Hill, BARNSLEY Phone: 2908
OPEN ALL DAY SATURDAY

THE WORLD'S GREATEST BOOKSHOP

FOYLES
FOR BOOKS

ALL YOUR CHRISTMAS

Gift Books

Stock of over three million volumes.
Quick postal service.

119-125 CHARING CROSS ROAD, LONDON, W.C.2
GERrard 5660 (20 lines) Open 9-6 (including Saturdays)
Two minutes from Tottenham Court Road Station

Recently Published

Workshop Hints & Tips

By GEOMETER

Fifty-nine instructional articles reprinted from the "Beginner's Workshop" series in *Model Engineer*. In magazine size format with numerous illustrations. An invaluable source of reference to the many tricky operations encountered in small workshop practice. **3s. 6d.** *Post 3d. (U.S.A. and Canada* $1.00)

PERCIVAL MARSHALL & CO. LTD.
19-20, NOEL STREET, LONDON, W.1

£10,000 Government Purchase

3-DRAW TELESCOPES

20 x 50

If you have your eye open for a bargain in telescopes—then this is it. Magnification 20x. Object glass dia. 1⅞". Weight approx. 2 lb., complete with leather case and slings.

Every purchase covered by our Guarantee of satisfaction or full refund. **£6-15-0** POST FREE

CHARLES FRANK
67-73 SALTMARKET GLASGOW, C.1 'Phone Bell 2106/7.

WE SPECIALISE

IN EVERYTHING FOR THE MODEL ENGINEER

Myford, Zyto, E.W., Emco-Unimat Lathes, Bridges, Wolf, B & D Units, Brook Motors, Plans, Materials, Tools, & Burnerd Chucks from stock.

"Caley" universal cutting oil **2/-.** Post 1/-.
"Caley" super steam oil **2/-.** post 1/-.
"Caley" steam packing $\frac{1}{16}$ rnd. 1½d. foot.
$\frac{1}{8}$ rnd. **3d.** $\frac{1}{8}$ square **7d.** foot.

PATTERNMAKING **CASTING** **MACHINING**
NO CATALOGUE MEANTIME S.A.E. ENQUIRIES

CALEDONIA MODEL CO.
5 PITT STREET GLASGOW C2
Corner of 468 Argyle Street

Turn your kitchen table into a work-shop with the

HAIGHTON "Cadet"

BACKGEARED AND SCREWCUTTING

2½" CENTRE LATHE

NOW AVAILABLE WITH MILLING ATTACHMENT

★ Precision built.
★ Takes standard chucks and tools.
★ Ingeniously designed for use *anywhere*.

Full details from
RICHARD HAIGHTON LIMITED
CANNING STREET · BURNLEY · LANCS.

COMPLETELY SELF-CONTAINED & PORTABLE!